www.andamiro.com

# SERVICE MANUAL

Ver 1.0

ISSUEDATE:Feb.14, 2017

STOP

IMPORTANT

- ▶ Please read the manual carefully and keep it in mind before using this machine.
- ▶ Put this manual within touch of your reference in anytime.

# PRECAUTIONS FOR USE

The following safety precautions are given throughout this manual. They must be strictly followed to protect those who install, use or maintain this product as well as to protect players, visitors and property.

For safety reasons.

- The following suggestions should be adhered to:

⚠ WARNING
Disregarding could result in serious injury.

⚠ CAUTION
Disregarding could result in injury or product damage.

- **The following graphic suggestions describe the types of precautions to be followed.**

⚠
Indicates a care should be taken.

⃠
Forbidden.

Indicates a matter which must be performed.

- **Precautions to be followed:**

**Certain procedures require a qualified in-shop maintenance person or industry specialist. For such instructions, a qualified person must take care of the jobs.**

- Otherwise an electric shock, machine trouble, or a serious accident may result.
- Replacing the machine parts, inspecting and maintaining the machines, and troubleshooting must be assigned only to a qualified in-shop maintenance person or industry specialist. This booklet gives instructions that hazardous jobs in particular must be handled by an industry specialist. Qualified in-shop maintenance person and industry specialist are defined as follows.

**Qualified in-shop maintenance person**

- A service staff shall have experience in operations of game machines. The staff shall be responsible for assembly, installation, inspection and maintenance of the machine.

**Industry specialist**

- An industry specialist must be engaged in designing, manufacturing, inspecting and servicing amusement machines. He or she must have an education in electrical, electronic and mechanical engineering, and routinely maintain and repair amusement machines.

# PRECAUTIONS FOR USE

## ⚠ WARNING

**Be sure to consult an industry specialist when setting up, moving or transporting this product.**

- This product should not be set up, moved or transported by any one other than an industry specialist.
- When installing this product, set the 4 leg levelers evenly on the floor and make sure that the product is installed stably in a horizontal position. Unstable installation may result in injury or accident.
- When installing this product, do not apply undue force on movable parts. Otherwise, injury and accident may result, or the product may be damaged.

**The machine for indoor usage only does not install outside.**

**Do not set the game machine up near emergency exits.**

**Protect the game machine from:**

- Rain or moisture.
- Direct sunlight.
- Direct heat from air-conditioning and heating equipment, etc..
- Hazardous flammable substances.
- Otherwise an accident or malfunction may result.

**Do not place containers holding chemicals or water on or near the game machine.**

**Do not place objects near the ventilating holes.**

**Do not bend the power cord by force or place heavy objects on it.**

**Never plug or unplug the power cord with wet hands.**

**Never unplug the game machine by pulling the power cord.**

## ⚠ CAUTION

**Be sure to use indoor wiring within the specified voltage requirements. For extension cord, use the specified rating or more.**

**Be sure to use the attached power cord.**

**Never plug more than one cord at a time into the electrical receptacle.**

**Do not lay the power cord where people walk through.**

**Be sure to ground this product.**

**Do not exert excessive force when moving the machine.**

**For proper ventilation, keep the game machine 100mm(4″) away from the walls.**

**Do not alter the system related dipswitch settings.**

# PRECAUTIONS FOR USE

## ⚠ WARNING

**If there is any abnormality such as smoke, bad smell or abnormal noise being emitted from the machine, immediately turn OFF the main power switch and unplug the power cord from the receptacle to stop operating it.**

- Using the machine in abnormal conditions could result in fire or accidents.

In case of abnormality

1. Turn OFF the main power switch.
2. Unplug the power cord from the receptacle.
3. Contact your nearest dealer.

**Do not leave the power cord plugged in improperly or covered with dust.**

- Doing so could result the power cord periodically.

## ⚠ CAUTION

**Do not use this product anywhere other than industrial areas.**

- Using in a residential area or an area next to a residential area could affect signal reception of radios, television sets, telephones, etc..
- Do not give shock the surface of glass products.

- Please do not play this game if
  - When you do drinking;
  - When your physical condition is not normal;
  - When you are in pregnancy;
  - When you have on a pulse controller;
  - When you have recently experienced a cramp or fainting away while watching TV.
- Avoid excessive force/shock while playing/moving the game.
- While do games, pay attention to surrounding.

**Do not plug or unplug the power cord with wet hands.**

**In handling the power cord, follow the instructions below.**

- Do not damage the power cord.
- Do not bend the power cord excessively.
- Do not heat the power cord.
- Do not bind the power cord.
- Do not sandwich the power cord.
- Do not modify the power cord.
- Do not twist the power cord.
- Do not pull the power cord.
- Do not stand on the power cord.
- Do not drive a nail into the power cord.

**If the power cord or power plug becomes damaged, stop using the machine immediately and ask your nearest dealer to replace the parts.**

* Electromagnetic wave may cause unexpected noise from speaker.

# PRECAUTIONS FOR USE

## ⚠ WARNING

**Be sure to turn OFF the main power switch and unplug the power cord from the receptacle before inspecting or cleaning the machine.**

**When replacing parts, be sure to use parts of the correct specifications. Never use parts other than the specified ones.**

**Opening inside the machine shall be done by machine specialist only as high electric current is being sent inside. For game machine with monitor, a care should be taken while opening its back door. If not, a damage to the inside parts or the monitor may occur.**

**If the sub power switch of the service panel is turned OFF without turning OFF the main power switch of the power supply unit, some parts in the units remain live. When opening the back door, be sure to turn OFF the main power switch and unplug the power cord from the receptacle.**

**Strictly refrain from disassembly and repair of parts which are not indicated in this manual, as well as settings and remodeling.**

**To clean the game machine, wipe it with a soft cloth dampened in a neutral detergent.**

- Using thinner of other organic solvent or alcohol may decompose the material.
- Electrical shock or equipment failure could be caused by water entering the inside of the machine.

## ⚠ CAUTION

**Components in the game are sensitive to vibrations and impact. Care should be used when moving and transporting the game machine.**
**Be sure not to let the machine tip over.**

**Before moving the machine, be sure to turn OFF the main power switch, unplug the power cord from the receptacle and remove the power cord form the machine.**

**Before moving take the machine, off the levelers and move it on the casters.**

**Avoid excessive force while moving the machine.**

## PRECAUTIONS IN HANDLING

- When setting up, inspecting, maintaining, moving or transporting this product, follow the procedures and instructions set forth in this manual and perform such work safely.
- Do not set up, handle, inspect, maintain, move or transport this product under conditions equivalent to the condition of "WARNING" or "CAUTION" specified in this manual.
- If a new owner is to have this product as a result of transfer, etc., be sure to give this manual to the new owner.

# PRÉCAUTION D’EMPLOI

Les consignes de sécurité suivantes sont données dans ce manuel. Elles doivent être strictement suivies pour protéger ceux qui les installent. Utiliser ou entretenir ce produit pour la sécurité des utilisateurs, des visiteurs et des biens.

Pour des raisons de sécurité.

- **Les suggestions suivantes doivent être respectées:**

**ATTENTION**
Le non-respect peut entraîner des blessures graves.

**PRUDENCE**
Le non-respect peut entraîner des blessures ou des dommages au produit.

- **Les suggestions graphiques suivantes décrivent les types de précautions à prendre.**

Indique qu’attention est requise.

Interdit.

Indique que quelque chose doit être effectuée.

- **Les précautions à prendre :**

**Certaines procédures exigent une personne de maintenance qualifiée en atelier ou un spécialiste de l'industrie. Pour ces instructions, une personne qualifiée doit prendre soin des travaux.**

- Sinon, un choc électrique, un dysfonctionnement de la machine, ou un accident grave peut en résulter.
- Remplacement des pièces de machines, l'inspection et la maintenance des machines, et le dépannage doit être attribué qu'à une personne de maintenance qualifiée en atelier ou spécialiste de l'industrie. Cette brochure donne des instructions que les emplois dangereux, en particulier, doivent être traités par un spécialiste de l'industrie. La personne de maintenance qualifiée en atelier et le spécialiste de l'industrie sont définis comme suit.

**La personne de maintenance qualifiée en atelier**

- Un personnel de service doit avoir de l'expérience dans les opérations de machines de jeux. Le personnel est responsable pour l'assemblage, l'installation, l'inspection et l'entretien de la machine.

**Le spécialiste de l'industrie**

- Un spécialiste de l'industrie doit être engagé dans la conception, la fabrication, l'inspection et l'entretien des appareils d'amusement.
  Il ou elle doit avoir une formation en génie électrique, électronique et mécanique, et de maintenir régulièrement et de réparer les appareils d'amusement.

# PRÉCAUTION D’EMPLOI

## ATTENTION

**Si il y a une anomalie comme fumée, mauvaise odeur ou bruit anormal émis par la machine, couper immédiatement l'interrupteur principal et débranchez le câble d'alimentation de la prise pour arrêter son fonctionnement.**

- L’utilisation de l'appareil dans des conditions anormales peut provoquer un incendie ou un accident.

En cas d'anomalie

1. Mettez l'interrupteur principal sur ARRÊT.
2. Débranchez le câble d'alimentation de la prise.
3. Contactez votre revendeur le plus proche.

**Ne pas brancher le câble d'alimentation incorrectement ou le laisser être recouvert de poussière.**

Cela pourrait nuire le câble d'alimentation.

## PRUDENCE

**Ne pas utiliser ce produit ailleurs que dans les zones industrielles.**

- L’utiliser dans une zone résidentielle ou d'une zone à côté d'un quartier résidentiel pourrait nuire à la réception des radios, téléviseurs, téléphones, etc.
- Ne donnez pas de choc à la surface d’un produit en verre.

- S'il vous plaît ne pas jouer à ce jeu.
  - Quand vous buvez;
  - Lorsque votre condition physique n'est pas normale;
  - Lorsque vous êtes dans une période de grossesse;
  - Lorsque vous avez un contrôleur d'impulsion;
  - Lorsque vous avez récemment subi une crampe ou évanouissement en regardant la télévision.
- Évitez une force excessive / un choc pendant la lecture / de déplacer le jeu.
- Quand vous jouez les jeux, faite attention aux alentours.

**Ne pas brancher ou débrancher le câble d'alimentation avec les mains mouillées.**

**Dans la manipulation du câble d'alimentation, suivez les instructions ci-dessous.**

- Ne pas endommager le câble d'alimentation.
- Ne pas plier le câble d'alimentation de manière excessive.
- Ne pas chauffer le câble d'alimentation.
- Ne pas lier le câble d'alimentation.
- Ne pas prendre en sandwich le câble d'alimentation.
- Ne pas modifier le câble d'alimentation.
- Ne tordez pas le câble d'alimentation.
- Ne tirez pas sur le câble d'alimentation.
- Ne montez pas sur le câble d'alimentation.
- Ne pas mettre un clou dans le câble d'alimentation.

**Si la fiche du câble d'alimentation ou est endommagé, cessez immédiatement d'utiliser la machine et demandez à votre revendeur le plus proche de remplacer les pièces.**

# PRÉCAUTION D’EMPLOI

## ⚠ ATTENTION

**Assurez-vous de consulter un spécialiste de l'industrie lors de la mise en place, du déplacement ou le transport de ce produit.**

- Ce produit ne doit pas être mis en place, déplacé ou transporté par une quelconque autre qu'un spécialiste de l'industrie.
- Lors de l'installation de ce produit, installez 4 niveleurs de pieds uniformément sur le sol et assurez-vous que le produit est installé de façon stable dans une position horizontale. Une installation instable peut entraîner des blessures ou un accident.
- Lors de l'installation de ce produit, ne pas appliquer une force excessive sur les pièces mobiles. Sinon, des blessures et des accidents peuvent y résulter, ou le produit peut être endommagé.

**La machine pour une utilisation en intérieur uniquement, ne pas installer à l'extérieur.**

**N’installez pas la machine de jeu près des issues de secours.**

**Protéger la machine de jeu de:**

- L’humidité ou la pluie.
- La lumière directe du soleil.
- La chaleur directe de la climatisation et du chauffage, etc...
- Des substances inflammables dangereuses.
- Sinon, un accident ou un dysfonctionnement.

**Ne pas placer les récipients contenant des produits chimiques ou de l'eau sur ou près de la machine de jeu.**

**Ne placez pas d'objets à proximité des orifices de ventilation.**

**Ne pas plier le cordon d'alimentation par la force ou de placer des objets lourds au-dessus.**

**Ne jamais brancher ou débrancher le cordon d'alimentation avec les mains mouillées.**

**Ne jamais débrancher la machine de jeu en tirant le câble d'alimentation.**

## ⚠ PRUDENCE

**Veillez à utiliser le câblage intérieur selon les exigences de tension spécifiées. Pour une rallonge, utilisez la notation spécifiée ou plus.**

**Veillez à utiliser le cordon d'alimentation fourni.**

**Ne jamais brancher plus d'un cordon à la fois dans la prise électrique.**

**Ne pas poser le cordon d'alimentation où les gens marchent à travers.**

**Soyez sûr de mettre à la terre ce produit.**

**Ne pas exercer une force excessive lors du déplacement de la machine.**

**Pour une ventilation correcte, garder la machine de jeu 100mm (4 ") loin des murs.**

**Ne pas modifier les réglages des commutateurs DIP liées au système.**

# PRÉCAUTION D’EMPLOI

## ⚠ ATTENTION

**Veillez à éteindre l'interrupteur d'alimentation principale et débranchez le cordon d'alimentation de la prise avant d'inspecter ou de nettoyer la machine.**

**Lors du remplacement des pièces, veillez à utiliser une partie des spécifications correctes.**
**Ne jamais utiliser de pièces autres que celles spécifiées.**

**L’ouverture à l'intérieur de la machine doit être effectuée par le spécialiste de la machine seulement, comme le courant électrique élevé est transmis à l'intérieur. Pour la machine de jeu avec le moniteur, un soin doit être pris lors de l'ouverture de sa porte arrière. Si non, une détérioration des pièces à l'intérieur ou à l'écran peut se produire.**

**Si l'interrupteur secondaire du panneau de service est éteint sans éteindre le commutateur d'alimentation principale de l'unité d'alimentation, certaines parties dans les unités restent sous tension. Lors de l'ouverture de la porte arrière, veillez à éteindre l'interrupteur d'alimentation principale et débranchez le cordon d'alimentation de la prise.**

**Il est strictement conseiller de s’abstenir de démonter et de réparer des pièces qui ne sont pas indiqués dans ce manuel, ainsi que les paramètres et le remodelage.**

**Pour nettoyer la machine de jeu, l'essuyer avec un chiffon doux imbibé avec un détergent neutre.**

- L’utilisation plus mince d'un autre solvant organique ou de l'alcool peut décomposer le matériel.
- Un choc électrique ou une défaillance de l'équipement pourraient être causés par la pénétration de l'eau à l'intérieur de la machine.

## ⚠ PRUDENCE

**Les composants de la machine de jeu sont sensibles aux vibrations et aux chocs. Il faut faire attention lors du déplacement et le transport de la machine de jeu.**
**Veillez à ne pas laisser la machine se renverser.**

**Avant de déplacer la machine, veillez à éteindre l'interrupteur d'alimentation principale, débranchez le cordon d'alimentation de la prise et débranchez le cordon d'alimentation de la machine.**

**Avant de déplacer la machine, la mettre hors des niveleurs et le déplacer sur les roulettes.**

**Éviter une force excessive lors du déplacement de la machine.**

## PRÉCAUTIONS LORS DU MANIEMENT

- Lors de la mise en place, l'inspection, l'entretien, déplacement ou le transport de ce produit, suivez les procédures et les instructions énoncées dans ce manuel et effectuer ce travail en toute sécurité.
- Ne pas mettre en place, manipuler, inspecter, entretenir, déplacer ou transporter ce produit dans des conditions équivalentes à l'état de "ATTENTION" ou "PRUDENCE" spécifiée dans ce manuel.
- ISi un nouveau propriétaire obtient ce produit à la suite d’un transfert, etc., soyez sûr de donner ce manuel au nouveau propriétaire.

# CONTENTS


1. SPECIFICATION AND DIMENSION .....P02
   1-1. DIMENSION .....P02
   1-2. SPECIFICATION .....P02
   1-3. NAME OF PARTS .....P03
   1-4. STICKER LOCATION .....P05
   1-5. COMPONENTS .....P06
2. INSTALLATION .....P07
   2-1. INSTALLATION SPACE .....P07
   2-2. HOW TO INSTALL [BILLBOARD] .....P08
   2-3. HOW TO INSTALL [COIN & CARD] .....P09
3. GAME CHARACTERISTICS .....P11
4. HOW TO PLAY .....P11
5. SETUP SETTING .....P12
   5-1. MACHINE SETUP .....P12
   5-2. SETUP MODE .....P14
   5-3. CLEAR MODE .....P18
   5-4. TEST MODE .....P22
   [ PAYOUT SETTING] .....P29
   5-5. ERROR CODE .....P30
   * HOW TO SET ID .....P32
6. TROUBLESHOOTING .....P33
   6-1. IN CASE OF POWER FAILURE .....P34
   6-2. MEDAL CIRCULATION FND CENTER FND PCB ERROR .....P36
   6-3. TICKETS, TOKENS, JACKPOT FND PCB ERROR .....P37
   6-4. WHEEL SPIN LED PCB ERROR .....P38
   6-5. BUTTON LED PCB ERROR .....P39
   6-6. SIDE FLEX LED, TOP FLEX LED PCB ERROR .....P40
   6-7. ARC FLEX LED, DOOR LED, TABLE LED, TOP LED ERROR .....P41
   6-8. TICKET DISPENSER ERROR .....P43
   6-9. IN CASE OF MALFUNCTION OF PUSHER .....P44
   6-10. COUNTER HOPPER ERROR .....P46
   6-11. ELEVATOR HOPPER ERROR .....P49
   6-12. CIRCULATION WIPER ERROR .....P53
   6-13. CIRCULATION ENCODER SENSOR ERROR .....P55
   6-14. CIRCULATION MAGNETIC SENSOR PCB ERROR .....P57
   6-15. CIRCULATION ERROR .....P58
   6-16. CONVEYER ERROR .....P60
   6-17. CARD DISPENSER ERROR .....P63
   6-18. SOUND ERROR .....P65
   6-19. COIN SELECTOR ERROR .....P66
   6-20. SETUP BUTTON ERROR .....P67
   6-21. COUNTER ERROR .....P68
   6-22. COMMUNICATION ERROR .....P69
7. EXPLODED VIEW .....P70
   7-1. MAIN CABINET PART .....P70
   7-2. FRONT TABLE PART .....P72
   7-3. SMPS POWER PART 01 .....P73
   7-4. SMPS POWER PART 02 .....P74
   7-5. MAIN IO PART .....P75
   7-6. SETUP PANEL PART .....P76
   7-7. ELEVATOR HOPPER PART .....P77
   7-8. COIN BOX PART .....P77
   7-9. COUNTER HOPPER PART .....P78
   7-10. TICKET DISPENSER PART .....P79
   7-11. BILLBOARD PART .....P80
   7-12. BILLBOARD CORNER DECO PART .....P81
   7-13. SCORE BOARD PANEL PART 01 .....P82
   7-14. SCORE BOARD PANEL PART 01 .....P83
   7-15. PUSHER PANEL PART .....P84
   7-16. FRONT ROLLER PART .....P85
   7-17. CARD DISPENSER PART .....P86
   7-18. GLASS DOOR PART .....P87
   7-19. FRONT DOOR PART .....P88
   * IN CASE INTERNAL DUST & STATIC ELECTRICITY OCCURRENCE .....P89
8. BLOCK DIAGRAM .....P90

# 1. SPECIFICATION AND DIMENSION

## 1-1. DIMENSION

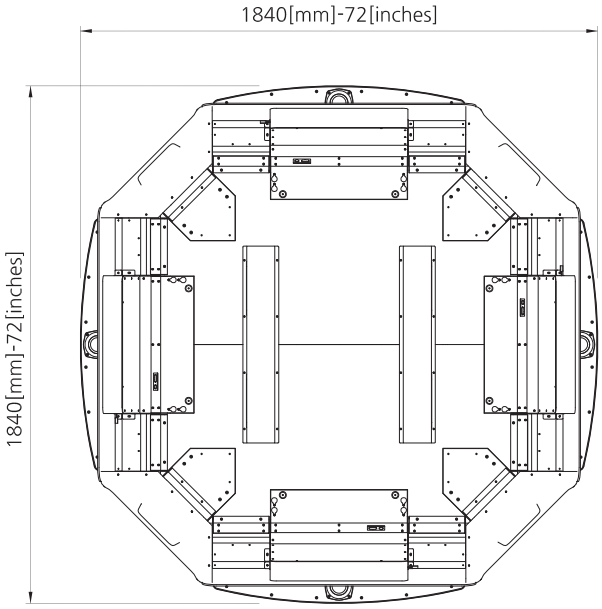


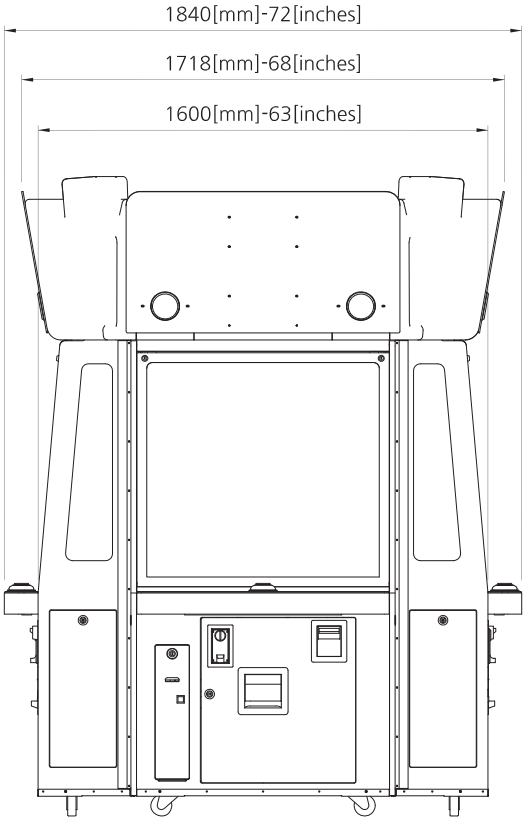


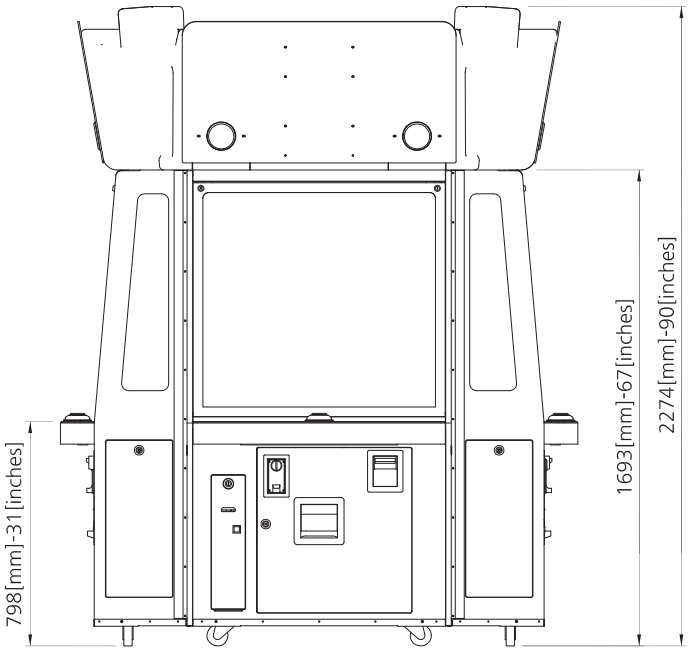


## 1-2. SPECIFICATION

| | |
|---|---|
| DIMENSION (W x D x H) | 1840 x 1840 x 2274 (mm) |
| PACKING DIMENSION (W x D x H) | 1950 x 1700 x 2300 (mm) |
| WEIGHT (kg) | 580 kg [ WEIGHT INCLUDING : 650 kg ] PACKAGING ] |
| VOLTAGE | AC 120V |
| FREQUENCY RANGE | 60Hz |
| CONSUMPTION | 700 W |

## 1-3. NAME OF PARTS

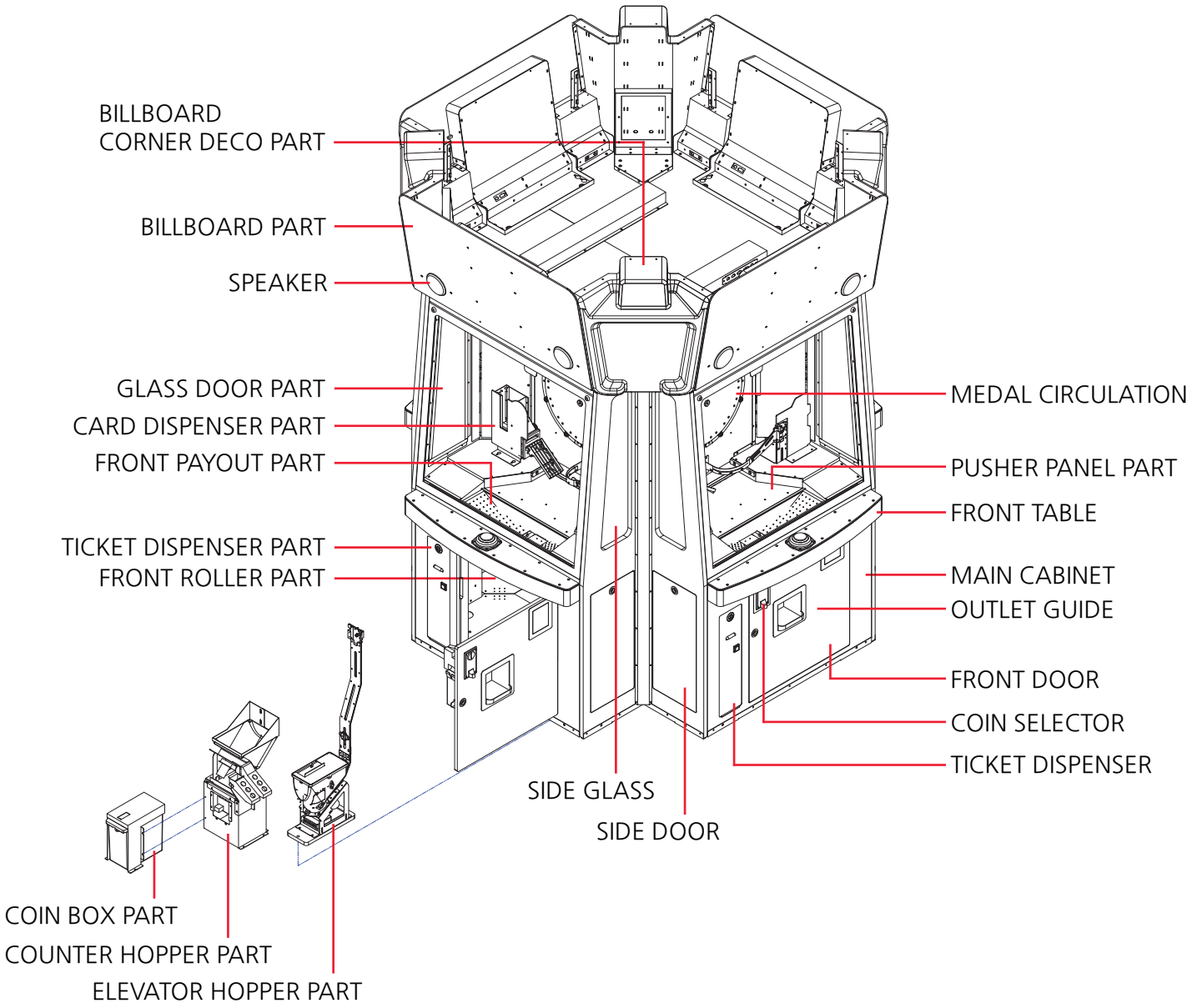

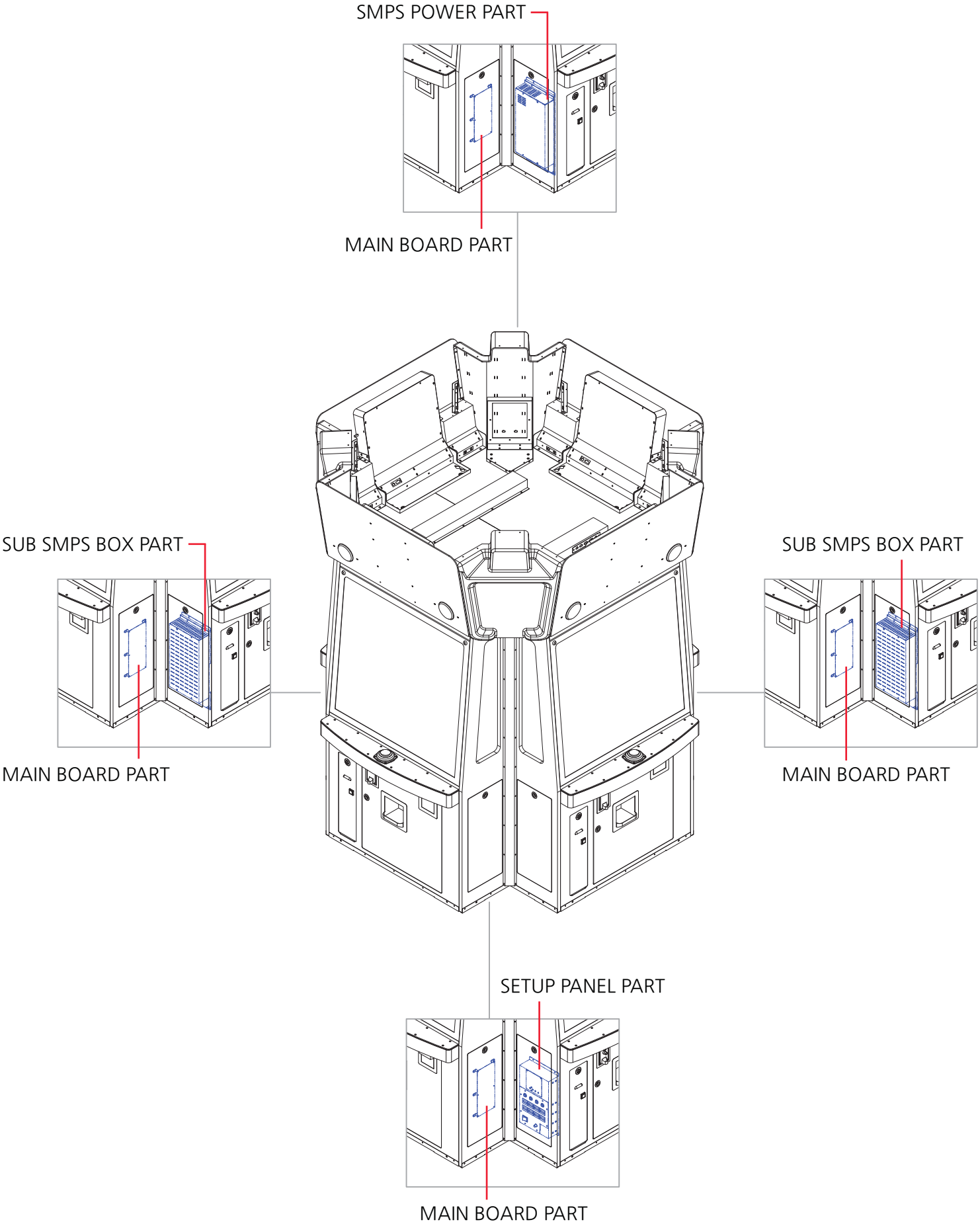
SMPS POWER PART
MAIN BOARD PART
SUB SMPS BOX PART
MAIN BOARD PART
SUB SMPS BOX PART
MAIN BOARD PART
SETUP PANEL PART
MAIN BOARD PART

# 1-4. STICKER LOCATION

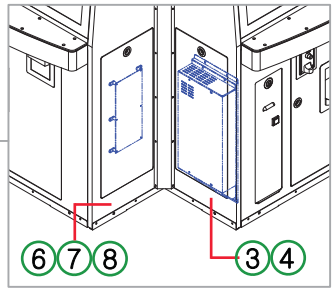


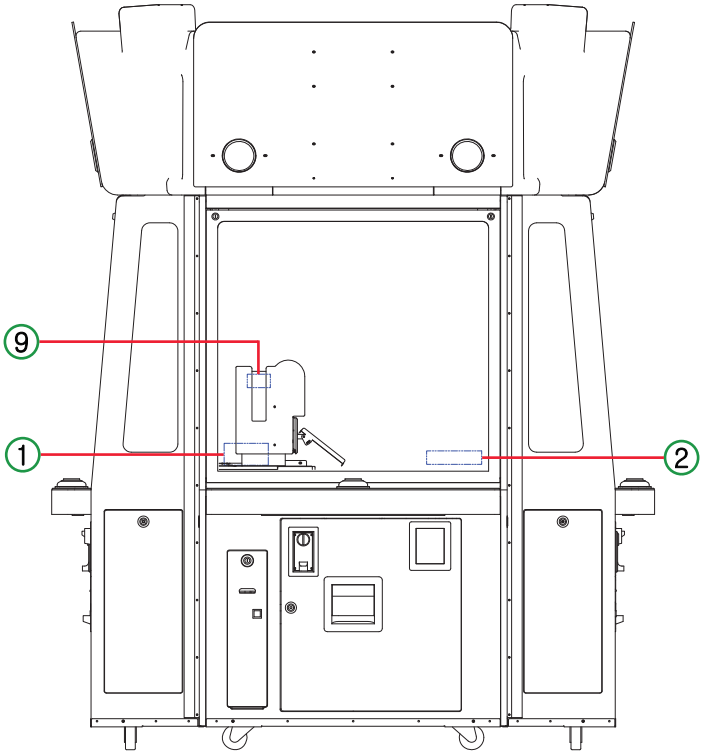


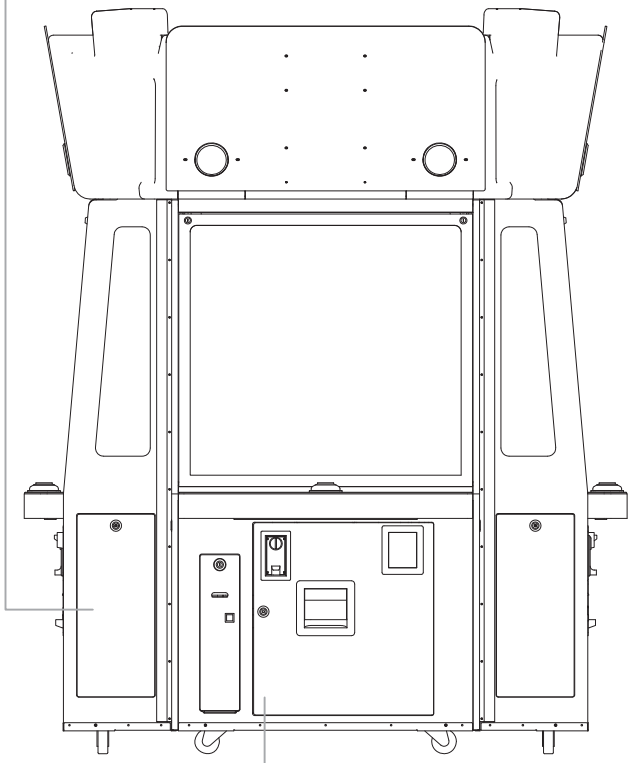

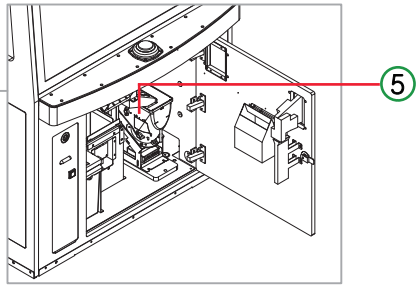


1

* limited to 1~4P

**NOTICE**

GAME IS EQUIPPED WITH SHAKE ALARM
ALARM WILL SOUND IF SHAKEN

2

* limited to 1~4P

**CAUTION/ PRUDENCE**

**Do not push or hit this. It would be damaged.**

**Ne pas la pousser ou frapper. Elle serait endommagée.**

3

**WARNING/ATTENTION**

Except service personnal, please never open the product as there is a risk of electric shock.

Il y a un risque d'éléctrocution, n'ouvrez pas le produit excepté le responsable, s'il vous plaît.

4

**CAUTION/PRUDENCE**

"For continuous protection against risk of fire, replace only with the same type 10A-250V fuse"

"Pour une protection continue contre les risques d'incendie, remplacer un fusible avec seulement le même type 10A-250V"

5

* limited to 1~4P

**NOTICE**

Please be sure to use the coins supplied by Andamiro. Otherwise, it will cause troubles to operation of hopper.

To clear out error 06 (ER06), tap the coin hopper by hand. then, push the reset button.

6

1 YEAR LIMITED WARRANTY

7

Product Name: GAME MACHINE
Model No. : DC SUPER HEROES
Rating: 120V~, 60Hz, 800W
Web site:
http://www.andamiro.com

ANDAMIRO®
MADE IN KOREA

Intertek
5001493

Suitable for Indoor Use Only

Serial Number

8

**WARNING**

ROCKING, SHAKING, OR TIPPING MAY CAUSE INJURY OR DEATH ! This unit must be fastened securely to the wall, floor or adjacent object in compliance with the installation instructions.

**ATTENTION**

AGITER, SECOUER OU BASCULER PEUT CAUSER DES BLESSURES OU ENTRAÎNER LA MORT! Cette unité doit être fixée au mur, au plancher ou à un objet à proximite conformément aux instructions d'installation.

9

* limited to 1~4P

**NOTICE**

**Before loading new cards, shuffule all cards properly.**

## 1-5. COMPONENTS

| NO. | PART NAME | SPEC. | QTY |
|---|---|---|---|
| 1 | AC POWER CORD | - | 1 |
| 2 | COIN | - | 1000 |
| 3 | CARD | - | 8 Box |
| 4 | CARD HEAVY PUSH BKT | - | 4 |
| 5 | VALUE SHEET | - | 4 |
| 6 | KEY | 6001, 7001 | 2 |
| 7 | BOLT | M4x8L | 170 |
| 8 | BOLT | M4x12L | 15 |
| 9 | BOLT | M6x25L | 8 |
| 10 | WRENCH | 2.5mm, 3mm | 1 |
| 11 | MANUAL | - | 1 |

# 2. INSTALLATION

## 2-1. INSTALLATION SPACE

- Need to have installation place.
  Maintenance Zone & Play zone should have at least
  3500mm x 3500mm each.

IMPORTANT

- Once you set up the machine with required game-play area, when installing this product, set the 4 leg levelers evevly on the floor and make sure that the product is installed stably in a horizontal position.
  Otherwise the set winning percentage can be twisted.

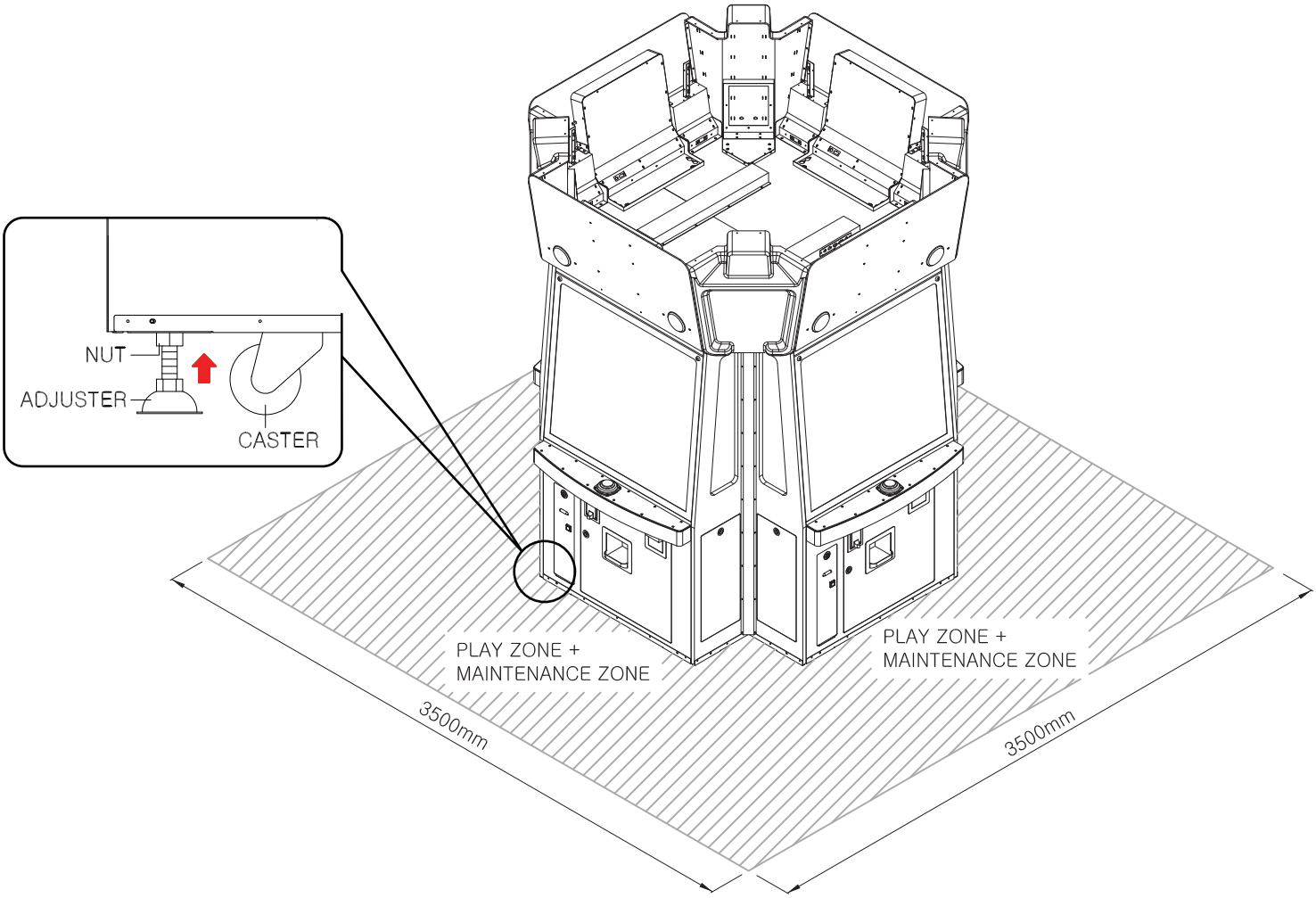

## 2-2. HOW TO INSTALL

**1**

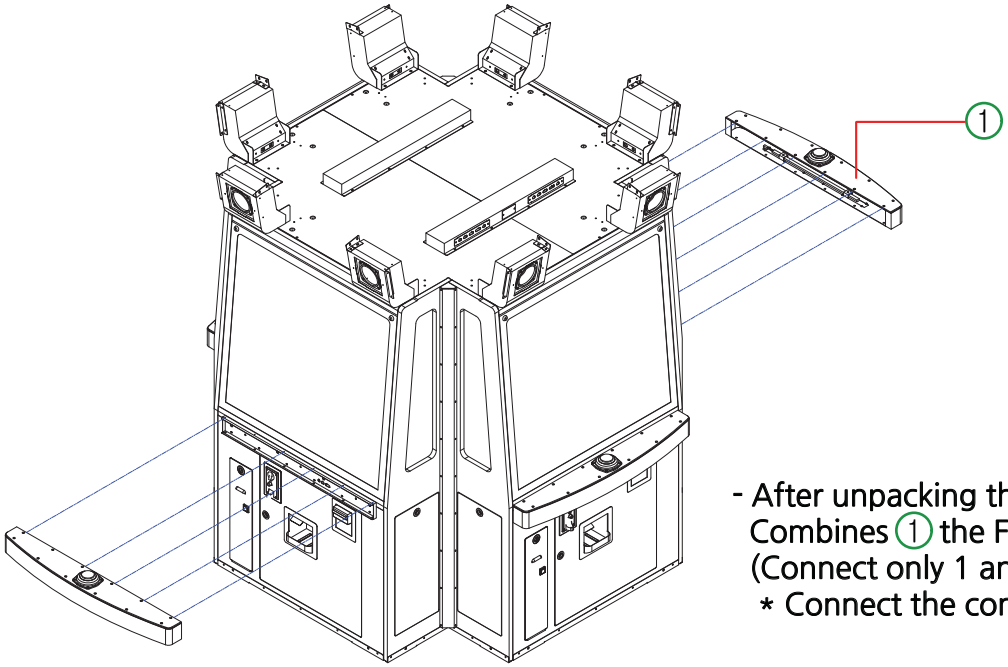


- After unpacking the machine packing, Combines ① the FRONT TABLE ASS'Y. (Connect only 1 and 3p) (M4 bolts)
  * Connect the connector when assembling

**2**

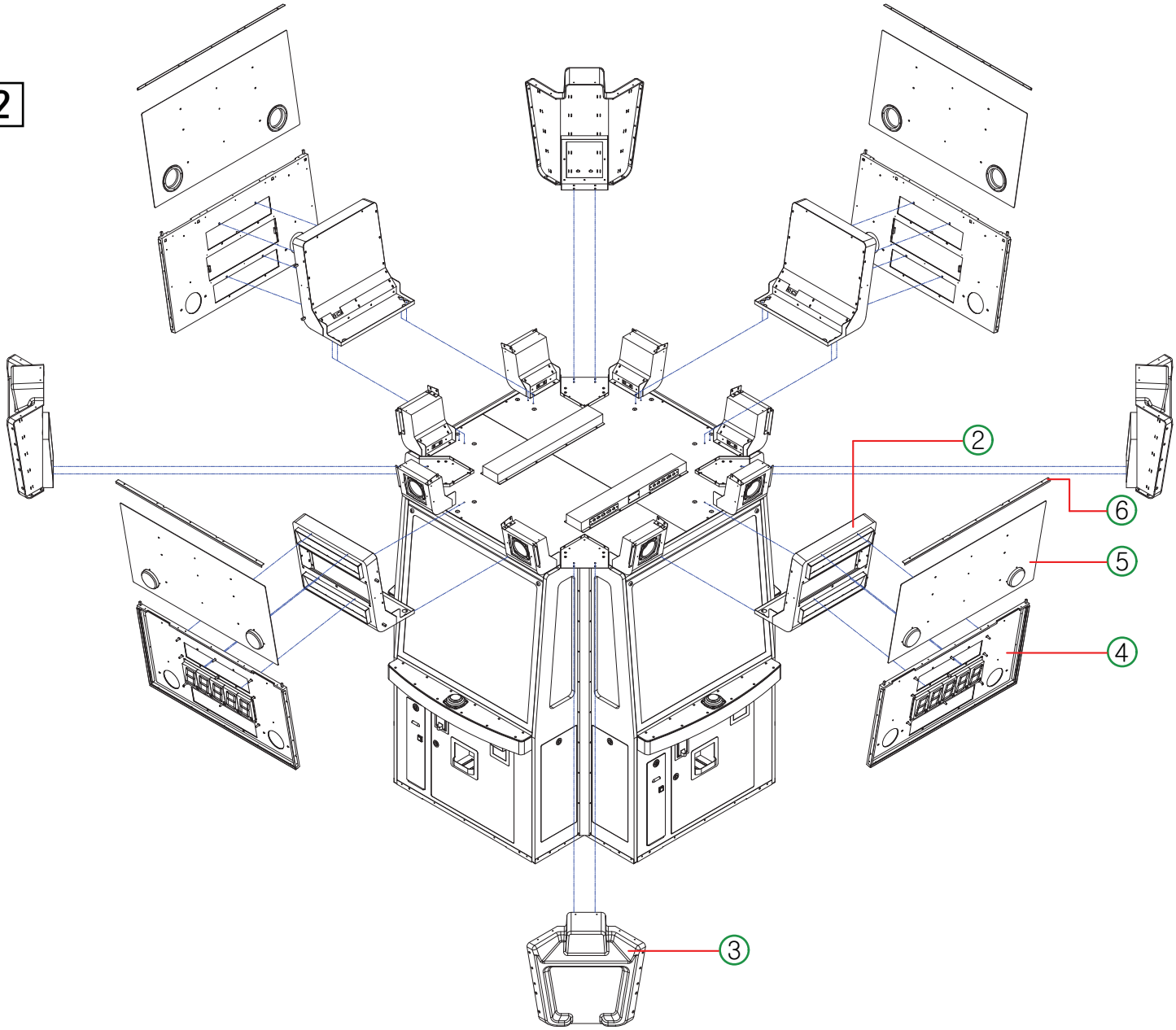


- After unpacking the machine packing, conncect billboard and acryl ② ~ ⑥ in sequesce as like below diagrams. (M4 bolts)
  * Connect the connector when assembling ②

## 2-3. HOW TO INSTALL [COIN & CARD]

1

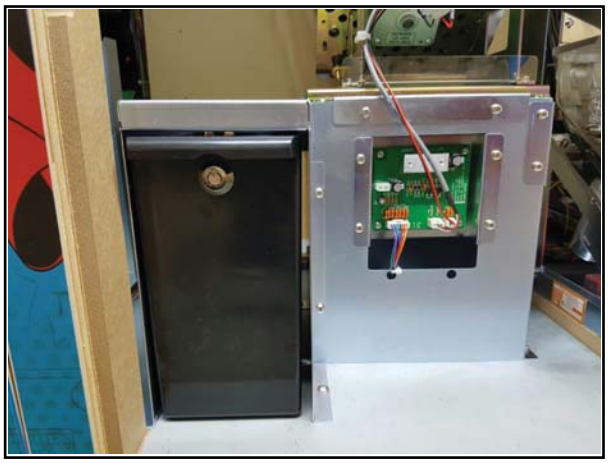

- Using by 7001 key, open 1~4P front door and then take out coins after open the coin box using by 6001 key.

2

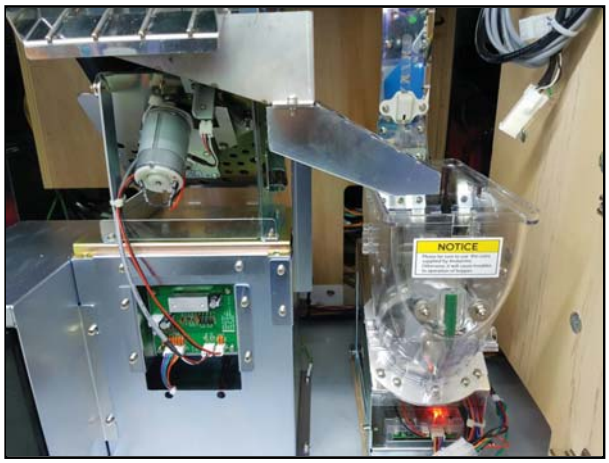


- Detach the cover after unlocking bolts in front and side of elevator hopper cover.

3

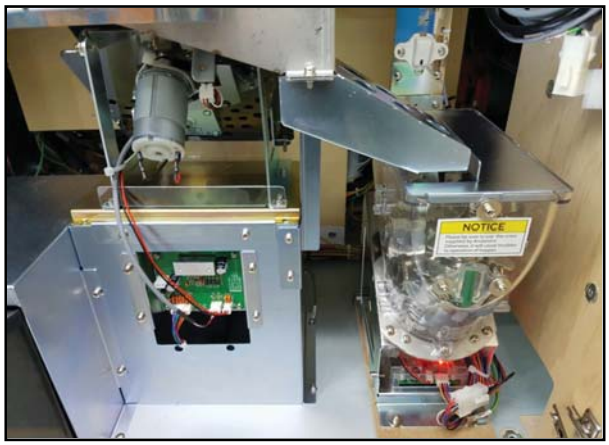


- Put 1000 coins each for 1P ~ 4P in Front Hopper.

4

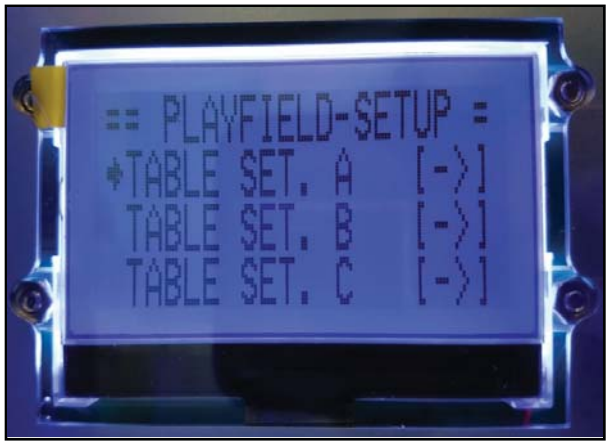


- Then, push select button among SET UP buttons and perform Perform by pushing Select button as OPERATION MENU / PLAYFIELD SETUP / TABLE SET.A in order.

- After selecting 1P ~ 4P PLAYER, supply 1000 coins to PUSHER BASE PANEL by Hopper.

5

- Then, put some of cards, which is included in Accessart Part, onto CARD DISPENSER and then lay H frame to fix it.

6

- Complete the supply of coins and cards as like picture 6.

* On initial setting, put some of cards onto PUSHER BASE PANEL then finish the setting.

7

- On column 6, Set 10~12 cards above coins supplied on PUSHER BASE PANEL as like the picture.

Then, maintain 8~10 cards on playing.

## 3. GAME CHARACTERISTICS

**3-1.** World Famous Characters.

**3-2.** Beautifully Styled Cabinet.

**3-3.** LED Lighting.

## 4. HOW TO PLAY

* Players must skillfully time the release of a token through moving targets to drop tokens, win free plays, and score cards that fall over the edge!

# 5. SETUP SETTINGS

## 5-1. MACHINE SETUP

### 1. HOW TO ENTER SETUP MENU

1 There is "Control panel" inside cabinet. User may set any setting using following.

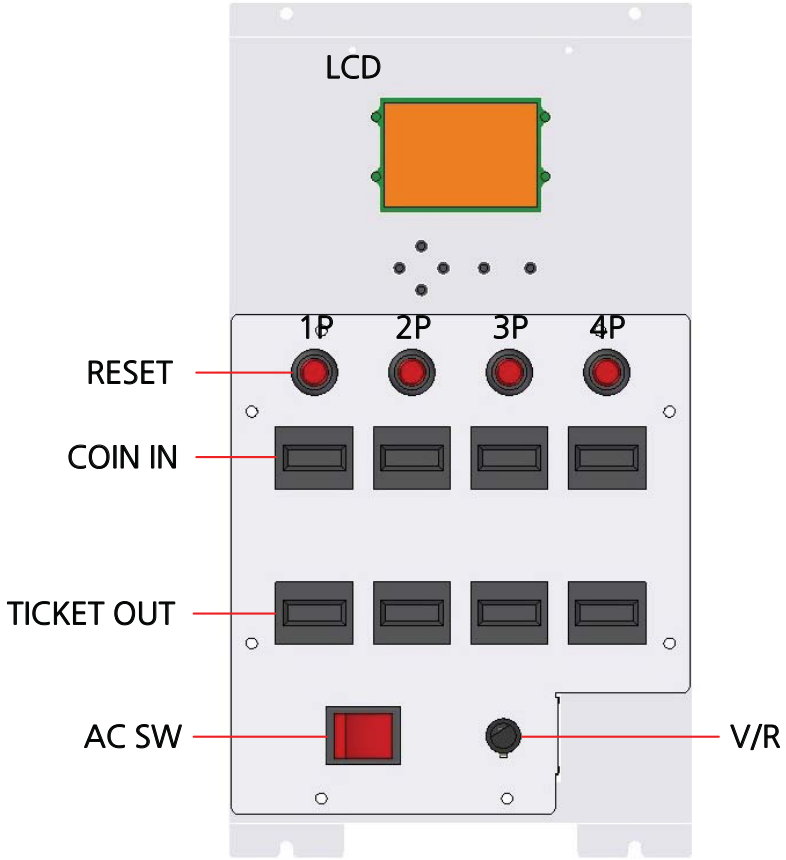


[ CONTROL PANEL ]

### 2. SETUP BUTTON LAYOUT

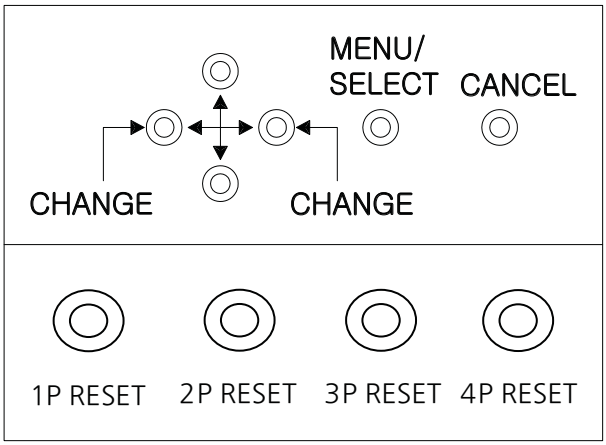


1) [ ↑↓ ] Up/Down Key : Menu Up/Down move
2) [ ← →] Left/Right Key : Change Setting value
3) MENU/SELECT key : Set up Menu mode, Select perform
4) CANCEL key : Exit

Normally Service In,
On ERROR, use to cancel ERROR.
* 1Credit per 1 service in

## [ OPERATION MENU ]

| PUSH MENU/SELECT | SELECT : ENTER SETUP MODE<br>CANCEL : RETURN TO PREVIOUS MENU or EXIT |
|---|---|
| ## OPERATION OPTIONS ## | |
| PROGRAM SETTING | SETUP MODE FOR EACH MENU |
| CLEAR MODE | CLEAR MODE FOR DATA |
| BOOKKEEPING | BOOKKEEPING DATA |
| FACTORY-SETTING | SET GAME TO FACTORY-SET VALUES |
| TEST MODE | TEST MODE |
| PLAYFIELD-SETUP | PUSHER TABLE SETTING |
| EXIT | RETURN TO THE GAME |

## 5-2. SETUP MODE

| MENU (LCD DISPLAY) | DESCRIPTION | RANGE | DEFAULT |
|---|---|---|---|
| TICKET/TOKEN | SET TICKET QTY PER TOKEN DROPPED ON COUNT HOPPER | NONE, 0.1, 0.125, 0.2, 0.25,0.33,0.5, 1, 2, 3, 4,5 | 0.5 |
| PLAYS/COIN | SET PLAYS(CREDITS)QTY PER COIN. IF USING COIN OR SWIPE CARD CONTINUOUSLY WITHOUT PLAY, DIFFERENT PLAY(CREDITS)QTY ARE PAID ACCORDING TO THE CONTINUOUS SWIPING NUMBERS | (REFER TO THE TABLE BELOW) | |
| PLAYS/BILL | SET PLAYS(CREDITS)QTY PER BILL. DIFFERENT PLAYS(CREDITS)ARE PAID ACCORDING TO THE BILL AMOUNT | (REFER TO THE TABLE BELOW) | |
| GAME TYPE | CHANGE THE VALUE OF BONUS SPIN LED & CIRCULATION FND | (REFER TO THE TABLE BELOW) | B |
| HERO BONUS | SET BASIC POINTS OF HERO BONUS | 100 ~ 99950 (INCREASED BY 50) | 3,000 |
| VILLAIN BONUS | SET BASIC POINTS OF VILLAIN BONUS | 100 ~ 99950 (INCREASED BY 50) | 5,000 |
| SUPER BONUS | SET BASIC POINTS OF SUPER BONUS | 100 ~ 99950 (INCREASED BY 50) | 10,000 |
| BONUS DROP SET | SET EACH LAMP POINT OF BONUS DROP | (REFER TO THE TABLE BELOW) | |
| CIRC. FND SET | SET EACH ZONE POINT OF CIRCULATION FND | (REFER TO THE TABLE BELOW) | |
| TOKENS/CARD | SET TOKEN QTY TO DROP A CARD ONLY A CARD IS DISPENSED WITHIN SET VALUE WHICH IS TOKEN QTY FROM HOPPER WHEN NO CARD IS DISPENSED WITHIN SET VALUE, A CARD IS AUTOMATICALLY DISPENSED AT THE LAST SET TOKEN | NONE, 50 ~ 500 (INCREASED BY 5) | 200 |
| MERCY TICKET | SET MERCY TICKET QTY PER COIN | 0 ~ 10 (INCREASED BY 1) | 0 |

| | | | |
|---|---|---|---|
| DEMO SOUND | SET DEMO SOUND TO ON OR OFF | OFF / ON | ON |
| SAVE AND EXIT | SAVE SET VALUE AND EXIT | PUSH SELECT BUTTON TO PERFORM | |
| CANCEL AND EXIT | CANCEL SET VALUE AND EXIT | | |

● PROGRAM SETTING -> PLAYS / COIN

* SET UP PLAY(CREDITS) PER COIN OR SWIPE.

- IN CASE OF SWIPING THE CARD REPEATEDLY TILL 5 TIMES WITHOUT ANY PLAY, PLAY QTY WILL BE INCREASED AS BELOW.

| LCD DISPLAY | DESCRIPTION | RANGE | DEFAULT |
|---|---|---|---|
| MININUM COIN | SET MINIUM COIN QTY FOR PLAY (EXAMPLEIF MINIMUM COIN IS SET TO 5, 1st. COIN > 2 PLAYS : WHEN 5 COINS ARE INSERTED, 2 PLAYS ARE ALLOWED) | 1 ~ 9 (INCREASED BY 1) | 1 |
| 1st. COIN | SET THE NO. OF PLAYS PER COIN WHEN SET TO FREE, FREE PLAY IS ACTIVE | FREE, 1 ~ 500 (INCREASED BY 1) | 12 |
| 2nd. COIN | SET THE NO. OF PLAYS PER COIN | 1 ~ 500 (INCREASED BY 1) | 26 |
| 3th. COIN | SET THE NO. OF PLAYS PER COIN | | 42 |
| 4th. COIN | SET THE NO. OF PLAYS PER COIN | | 60 |
| 5th. COIN | SET THE NO. OF PLAYS PER COIN | | 75 |
| SAVE AND EXIT | SAVE SET VALUE AND EXIT | | |
| CANCEL AND EXIT | CANCEL SET VALUE AND EXIT | | |

● PROGRAM SETTING -> PLAYS / BILL SET

* SET UP PLAY(CREDITS) PER BILL

- THE NO. OF PLAY IS INCREASED ACCORDING TO THE SIGNAL FROM BILL ACCEPTOR

| LCD DISPLAY | DESCRIPTION | RANGE | DEFAULT |
|---|---|---|---|
| TYPE | SET "COIN" WHEN BILL SIGNAL IS USED FOR COIN SIGNAL, SET "BILL" WHEN BILL SIGNAL IS USED FOR BILL ACCEPTOR<br>EXAMPLE)SET "COIN" WHEN BILL SIGNAL IS CONNECTED TO COIN SELECTOR | COIN, BILL | BILL |
| 1 BILL | SET THE NO. OF PLAYS FOR $1.00 | 1 ~ 500 (INCREASED BY 1) | 12 |
| 2 BILLS | SET THE NO. OF PLAYS FOR $2.00 | | 26 |
| 3 BILLS | SET THE NO. OF PLAYS FOR $3.00 | | 42 |
| 4 BILLS | SET THE NO. OF PLAYS FOR $4.00 | | 60 |
| 5 BILLS | SET THE NO. OF PLAYS FOR $5.00 | | 75 |
| 10 BILLS | SET THE NO. OF PLAYS FOR $10.00 | | 175 |
| 20 BILLS | SET THE NO. OF PLAYS FOR $20.00 | | 400 |
| SAVE AND EXIT | SAVE SET VALUE AND EXIT | | |
| CANCEL AND EXIT | CANCEL SET VALUE AND EXIT | | |

● PROGRAM SETTING ->

GAME TYPE SET (THIS MENU MUST BE SET AFTER FACTORY SETTING)

◇ CHANGE FACTORY-SET VALUE(B) FOR BONUS DROP LED & CIRCULATION FND

AFTER CHANGING FACTORY-SET VALUE(B), CHOOSE "SAVE" THEN, EXIT AT PROGRAM SETTING

| SECTION | BONUS DROP LED | | | | | | | CIRCULATION FND | | | | | |
|---|---|---|---|---|---|---|---|---|---|---|---|---|---|
| | 01 | 02 | 03 | 04 | 05 | 06 | 07 | 01 | 02 | 03 | 04 | 05 | 06 |
| A | 6 | CARD | 4 | 10 | 4 | CARD | 6 | 2 | 3 | 1 | 1 | 3 | 2 |
| B | 8 | CARD | 5 | 15 | 5 | CARD | 8 | 5 | 3 | 1 | 1 | 3 | 5 |
| C | 8 | CARD | 4 | 15 | 4 | CARD | 8 | 2 | 3 | 1 | 1 | 3 | 2 |

● PROGRAM SETTING -> BONUS SPIN SET

◇ CHANGE EACH LAMP POINT ON BONUS DROP LED(LAMP 1~7 FROM THE LEFT)

* NOTE : PAYOUT IS DIFFERENT WHEN CHANGED

| LCD DISPLAY | DESCRIPTION | RANGE | DEFAULT |
|---|---|---|---|
| BONUS DROP 1 | SET POINTS(TOKENS) ON LAMP 1 | 1 ~ 99, CARD (INCREASED BY 1) | 8 |
| BONUS DROP 2 | SET POINTS(TOKENS) ON LAMP 2 | | CARD |
| BONUS DROP 3 | SET POINTS(TOKENS) ON LAMP 3 | | 5 |
| BONUS DROP 4 | SET POINTS(TOKENS) ON LAMP 4 | | 15 |
| BONUS DROP 5 | SET POINTS(TOKENS) ON LAMP 5 | | 5 |
| BONUS DROP 6 | SET POINTS(TOKENS) ON LAMP 6 | | CARD |
| BONUS DROP 7 | SET POINTS(TOKENS) ON LAMP 7 | | 8 |
| SAVE AND EXIT | SAVE SET VALUE AND EXIT | | |
| CANCEL AND EXIT | CANCEL SET VALUE AND EXIT | | |

● PROGRAM SETTING -> CIRC. FND SET

◇ CHANGE EACH ZONE POINT ON CIRCULATION DROP FND (ZONE 1~6 FROM THE LEFT WITHOUT CENTER ZONE)

* NOTE : PAYOUT IS DIFFERENT WHEN CHANGED

| LCD DISPLAY | DESCRIPTION | RANGE | DEFAULT |
|---|---|---|---|
| FND 1 | SET POINTS(TOKENS) ON ZONE FND 1 | 1 ~ 9 (INCREASED BY 1) | 5 |
| FND 2 | SET POINTS(TOKENS) ON ZONE FND 2 | | 3 |
| FND 3 | SET POINTS(TOKENS) ON ZONE FND 3 | | 1 |
| FND 4 | SET POINTS(TOKENS) ON ZONE FND 4 | | 1 |
| FND 5 | SET POINTS(TOKENS) ON ZONE FND 5 | | 3 |
| FND 6 | SET POINTS(TOKENS) ON ZONE FND 6 | | 5 |
| SAVE AND EXIT | SAVE SET VALUE AND EXIT | | |
| CANCEL AND EXIT | CANCEL SET VALUE AND EXIT | | |

## 5-3. CLEAR MODE

● CLEAR MODE

CLEAR GAME DATA AND BOOKKEEPING DATA

| LCD DISPLAY | DESCRIPTION | PERFORM |
|---|---|---|
| CLEAR TICKETS | CLEAR CURRENT PAYABLE TICKETS | SELECT BUTTON<br><br>CLEAR XXXX DATA<br>ARE YOU SURE?<br>YES or 〔NO〕<br>PERFORM AFTER<br>CURSER MOVING |
| CLEAR PLAYS | CLEAR CURRENT PLAY | |
| CLEAR HOPPER | CLEAR CURRENT PAYABLE TOKENS(ELEVATOR HOPPER) | |
| CLEAR GAME DATA | CLEAR GAME DATA & BOOKKEEPING DATA | |
| EXIT | EXIT | |

- **BOOKKEEPING**

| LCD DISPLAY(1P,2P,3P,4P)<br>1P 2P<br>3P 4P | DESCRIPTION |
|---|---|
| ---- CARD PER TOKENS ---<br>50 80<br>50 80 | AVERAGE TOKEN QTY PER DISPENSED CARD<br>(TOTAL TOKEN QTY/ TOTAL DISPENSED CARD) |
| --------- COIN IN -------<br>12 25<br>12 25 | TOTAL COIN IN QTY |
| ------ BILL IN ------<br>1 3<br>1 3 | TOTAL BILL IN QTY<br>ACCUMULATED INPUT PULSE QTY |
| ----SERVICE IN----<br>10 5<br>10 5 | TOTAL SERVICE IN QTY |
| ------ PLAY IN ------<br>100 20<br>100 20 | TOTAL PLAY QTY |
| ------- TICKET OUT ------<br>730 960<br>730 960 | TOTAL TICKET OUT QTY |
| ---- CARD DISPENSER ----<br>1 2<br>3 4 | TOTAL CARD OUT QTY FROM CARD DISPENSER |
| ---- ELEVATOR HOPPER ----<br>100 200<br>300 400 | TOTAL TOKEN-OUT QTY FROM ELEVATOR HOPPER |
| ---- COUNTER HOPPER ----<br>50 100<br>100 50 | TOTAL TOKEN-OUT QTY FROM COUNTER HOPPER |

| | |
|---|---|
| ----- BONUS DROP 1 -----<br>10 11<br>12 13 | THE TOTAL NO. OF BONUS DROP 1 |
| ----- BONUS DROP 2 -----<br>20 21<br>22 23 | THE TOTAL NO. OF BONUS DROP 2 |
| ----- BONUS DROP 3 -----<br>30 31<br>32 33 | THE TOTAL NO. OF BONUS DROP 3 |
| ----- BONUS DROP 4 -----<br>40 41<br>42 43 | THE TOTAL NO. OF BONUS DROP 4 |
| ----- BONUS DROP 5 -----<br>50 51<br>52 53 | THE TOTAL NO. OF BONUS DROP 5 |
| ----- BONUS DROP 6 -----<br>60 61<br>62 63 | THE TOTAL NO. OF BONUS DROP 6 |
| ----- BONUS DROP 7 -----<br>70 71<br>72 73 | THE TOTAL NO. OF BONUS DROP 7 |
| ---- CIRCULATION DROP ----<br>10 11<br>12 13 | THE TOTAL NO. OF BONUS DROP (CENTER) IN CIRCULATION |
| ----- CIRCULATION 1 -----<br>20 21<br>22 23 | THE TOTAL NO. OF CIRCULATION FND 1 |
| ----- CIRCULATION 2 -----<br>30 31<br>32 33 | THE TOTAL NO. OF CIRCULATION FND 2 |
| ----- CIRCULATION 3 -----<br>40 41<br>42 43 | THE TOTAL NO. OF CIRCULATION FND 3 |
| ----- CIRCULATION 4 -----<br>50 51<br>52 53 | THE TOTAL NO. OF CIRCULATION FND 4 |

| | |
|---|---|
| ----- CIRCULATION 5 -----<br>60 61<br>62 63 | THE TOTAL NO. OF CIRCULATION FND 5 |
| ----- CIRCULATION 6 -----<br>70 71<br>72 73 | THE TOTAL NO. OF CIRCULATION FND 6 |
| --T. ELEVATOR HOPPER--<br>111 222<br>333 444 | TOTAL QUANTITY EMITTED TO HOPPER ELEVATOR<br>(It is not cleared by FACTORY SETTING) |
| --T. COUNTER HOPPER --<br>123 456<br>457 50 | TOTAL QUANTITY EMITTED TO COUNTER ELEVATOR<br>(It is not cleared by FACTORY SETTING) |
| ----- VER INFO ----- | DISPLAY VERSION INFO |
| CANCEL BUTTON : RETURN TO PREVIOUS MENU | |

● FACTORY-SETTING INITIALIZE TO FACTORY-SET VALUE (CLEAR TOTAL DATA AND RETURN TO FACTORY-SET VALUE)

| LCD DISPLAY (PERFORM) | LCD DISPLAY (PERFORM) |
|---|---|
| FACTORY-SETTING<br>ARE YOU SURE?<br>YES or 〔NO〕<br>PERFORM AFTER THE CURSER MOVES | FACTORY-SETTING<br>REALLY?<br>YES or 〔NO〕<br>PERFORM AFTER THE CURSER MOVES |

## 5-4. TEST MODE

● TEST MODE

| LCD DISPLAY | STATUS | DESCRIPTION |
|---|---|---|
| INPUT TEST | (REFER TO THE TABLE BELOW) | TEST INPUT SIGNAL |
| LED&FND&LAMP | OFF/ON/STEP | TEST THE STATUS OF LED&FND&LAMP<br>OFF : TOTAL OFF<br>ON : TOTAL ON<br>STEP : ACT ACCORDING TO THE SPECIFIED SEQUENCE<br>ON/OFF : ON AND OFF OPERATE CONSTANTLY |
| CIRCULATION<br>1 PLAYER OFF<br>2 PLAYER OFF<br>3 PLAYER OFF<br>4 PLAYER OFF<br>1P+2P+3P+4P<br>TEST VIEW<br>EXIT | OFF/ON<br>(DISPLAY OF OPERATION STAUS) | TEST CIRCULATION AND WIPER<br>TICKET FND : DISPLAY THE STATUS OF WIPER SENSOR<br>PLAYS FND : DISPLAY THE STATUS OF UPPER TOKEN SENSOR IN CIRCULATION<br>TARGET FND : DISPLAY THE STATUS OF EACH ZONE SENSOR IN CIRCULATION<br>1P+2P+3P+4P : ALL PLAYER ACTIONS<br>TEST VIEW : DISPLAYS THE NUMBER OF TIMES EACH SENSOR HAS ENTERED |
| PUSHER<br>1 PLAYER OFF<br>2 PLAYER OFF<br>3 PLAYER OFF<br>4 PLAYER OFF<br>1P+2P+3P+4P<br>EXIT | OFF/ON<br>(DISPLAY OF OPERATION STAUS) | TEST PUSHER MOTOR MOVEMENT<br>TICKET FND : DISPLAY THE STATUS OF PUSHER MOTOR<br>1P+2P+3P+4P : ALL PLAYER ACTIONS |
| ELEVATOR HOPPER<br>1 PLAYER OFF<br>2 PLAYER OFF<br>3 PLAYER OFF<br>4 PLAYER OFF<br>EXIT | OFF/ON<br>(DISPLAY OF OPERATION STAUS) | TEST THE MOVEMENT OF ELEVATOR HOPPER<br>AFTER DISPENSING 3 TOKENS, STOP AUTOMATICALLY<br>TICKET FND : DISPLAY THE STATUS OF SENSOR<br>PLAY FND : THE NO. OF DISPENSED TOKENS |
| COUNTER HOPPER<br>1 PLAYER OFF<br>2 PLAYER OFF<br>3 PLAYER OFF<br>4 PLAYER OFF<br>EXIT | OFF/ON<br>(DISPLAY OF OPERATION STAUS) | TEST THE MOVEMENT OF COUNTER HOPPER<br>AFTER DISPENSING 3 TOKENS, STOP AUTOMATICALLY<br>TICKET FND : DISPLAY THE STATUS OF SENSOR<br>PLAY FND : THE NO. OF DISPENSED TOKEN |

| | | |
|---|---|---|
| CARD DISPENSER<br>1 PLAYER OFF<br>2 PLAYER OFF<br>3 PLAYER OFF<br>4 PLAYER OFF<br>EXIT | OFF/ON<br>(DISPLAY OF OPERATION STAUS) | TEST THE MOVEMENT OF CARD DISPENSER<br>ON TESTING, THIS DISPENSES A CARD AND STOPS AUTOMATICALLY<br>TICKET FND : DISPLAYS THE STATUS OF SENSOR |
| CONVEYER<br>1 PLAYER OFF<br>2 PLAYER OFF<br>3 PLAYER OFF<br>4 PLAYER OFF<br>1P+2P+3P+4P<br>EXIT | OFF/ON<br>(DISPLAY OF OPERATION STAUS) | TEST THE MOVEMENT OF CONVEYER<br>TICKET FND : DISPLAYS THE STATUS OF SENSOR |
| TICKET<br>1 PLAYER OFF<br>2 PLAYER OFF<br>3 PLAYER OFF<br>4 PLAYER OFF<br>EXIT | OFF/ON<br>(DISPLAY OF OPERATION STAUS) | TEST THE MOVEMENT OF TICKET DISPENSER<br>ON TESTING, THIS DISPENSES 3 TICKETS AND STOPS AUTOMATICALLY<br>TICKET FND : THE NO. OF DISPENSED TICKETS |
| COIN<br>1 PLAYER OFF<br>2 PLAYER OFF<br>3 PLAYER OFF<br>4 PLAYER OFF<br>EXIT | OFF/ON<br>(DISPLAY OF OPERATION STAUS) | TEST OF COIN SELECTOR<br>ON TESTING, CHECK POWER-ON/OFF OF COIN SELECTOR<br>TICKET FND : THE NO. OF INSERTED COINS |
| COUNTER<br>1 PLAYER 0 0<br>2 PLAYER 0 0<br>3 PLAYER 0 0<br>4 PLAYER 0 0<br>EXIT | DISPLAY<br>COUNTER SIGNAL | TEST COUNTER<br>LEFT BUTTON : INCREASES 1 ON COIN COUNTER<br>RIGHT BUTTON : INCREASES 1 ON TICKET COUNTER |
| SOUND | (REFER TO THE TABLE BELOW) | SOUND TEST |
| EXIT | EXIT TO PREVIOUS MENU | |

| ● TEST MODE -> INPUT TEST | |
|---|---|
| LCD DISPLAY(1P,2P,3P,4P) | DESCRIPTION<br>CONFIRM 1P,2P OR 3P,4P WITH UP, DOWN BUTTON. |
| 1P INPUT TEST 2P<br>00000000 00000000<br>00000000 0 00000000<br>00000000 00000000 | DISPLAY INPUT SIGNAL AND STATUS.<br>WHEN INPUT SIGNAL IS CHANGED,A SOUND IS PLAYED.<br>“0” IN THE MIDDLE IS FOR TILT SENSOR. |

| DESCRIPTION (2P, 3P AND 4P INPUT TEST IS SAME AS 1P INPUT TEST.) | |
|---|---|
| 00000000 | **1**. COIN SENSOR **2**. BILL SENSOR **3**. TICKET SENSOR **4**. TICKET BUTTON **5**. 1P RESET BUTTON<br>**6**. 2P RESET BUTTON **7**. 3P RESET BUTTON **8**. 4P RESET BUTTON |
| 00000000 | **1**. START BUTTON **2**. CONVEYER SENSOR **3**. CARD OUT SENSOR **4**. PUSHER SENSOR<br>**5**. COUNTER HOPPER SENSOR **6**. ELEVATOR HOPPER SENSOR **7**. CARD DISPENSER SENSOR<br>**8**. CIRCULATION WIPER SENSOR |
| 00000000 | **1**.CIRCULATION TOP SENSOR **2**.CIRCULATION 1 SENSOR **3**. CIRCULATION 2 SENSOR<br>**4**. CIRCULATION 3 SENSOR **5.** CIRCULATION 3 SENSOR **6.** CIRCULATION 4 SENSOR<br>**7.** CIRCULATION 5 SENSOR **8.** CIRCULATION 6 SENSOR |
| 00000000 | **1.** DIP SWITCH_1 **2.** DIP SWITCH_2 **3.** DIP SWITCH_3 **4.** DIP SWITCH_4 **5.** DIP SWITCH_5<br>**6.** DIP SWITCH_6 **7.** DIP SWITCH_7 **8.** DIP SWITCH_8 |

| ● **TEST MODE -> SOUND** | | |
|---|---|---|
| **LCD DISPLAY** | **CONFIGURATION** | **EXPLANATION** |
| CHANNEL STOP 1 | | CHANNEL TEST From 1 to 8 |
| SOUND 1 STOP AUTO | AUTO<br>1 ~ 151 | SELECT THE DESIRED SOUND NUMBER WITH THE RIGHT OR LEFT BUTTON AND PRESS THE SELECT BUTTON TO SELECT THE SOUND OUTPUT.<br>AUTO : Output overall SOUND sequentially<br>1 ~ 151 : Output desired SOUND |
| EXIT | EXIT TO SOUND TEST | |

● PLAYFIELD-SETUP

◇ ON FIRST SETTING UP THE MACHINE AT A LOCATION, EXCUTE TABLE SET WITH SUPPLIED TOKENS FILLED IN THE ELEVATOR HOPPER

| LCD DISPLAY | DESCRIPTION | PERFORM |
|---|---|---|
| TABLE SET. A | ON FIRST SETTING UP THE MACHINE A LOCATION (REFER TO TABLE 7) | PUSH SELECT BUTTON AND PERFORM |
| TABLE SET. B | ON ROUTINE TESTING THE MACHINE. (REFER TO TABLE 8) | |
| TABLE SET. C | ON ROUTINE TESTING THE MACHINE. (REFER TO TABLE 9) | |
| EXIT | RETURN TO PREVIOUS MENU | |

● PLAYFIELD-SETUP -> TABLE SET. A PERFORM

◇ ON FIRST SETTING UP THE MACHINE AT A LOCATION, EXCUTE TABLE SET. A AS BELOW.

① FILL 1,000TOKENS IN EACH ELEVATOR HOPPER

② ENTER TABLE SET A AND SELECT 1P, 2P, 3P AND 4P

③ 1,000TOKENS ARE AUTOMATICALLYLAUNCHED

④ WHEN 1,000TOKENS ARE LAUNCHED, PUSHER TABLE TOKENS ARE READY TO PLAY

| LCD DISPLAY | DESCRIPTION | PEFORM |
|---|---|---|
| PUSHER TABLE SET. A | SELECT AND PERFORM | PUSH SELECT BUTTON AND PERFORM |
| 1 PLAYER STOP | PERFORM ONLY 1P | |
| 2 PLAYER STOP | PERFORM ONLY 2P | |
| 3 PLAYER STOP | PERFORM ONLY 3P | |
| 4 PLAYER STOP | PERFORM ONLY 4P | |
| 1P+2P+3P+4P | PERFORM 1P, 2P, 3P AND 4P ALL TOGETHER | |
| EXIT | RETURN TO PREVIOUS MENU | |

● PLAYFIELD-SETUP -> TABLE SET. B PERFORM

◇ ROUTINE FUNCTION TEST ON MANUFACTURING (AGING TEST)
3,000PLAYS ARE AUTOMATICALLYPERFORMED WITH CARDS/TICKETS DISPENSED

| LCD DISPLAY | DESCRIPTION | PEFORM |
|---|---|---|
| PUSHER TABLE SET. B | SELECT AND PERFORM | PUSH SELECT BUTTON AND PERFORM |
| 1 PLAYER STOP | PERFORM ONLY 1P | |
| 2 PLAYER STOP | PERFORM ONLY 2P | |
| 3 PLAYER STOP | PERFORM ONLY 3P | |
| 4 PLAYER STOP | PERFORM ONLY 4P | |
| 1P+2P+3P+4P | PERFORM 1P, 2P, 3P AND 4P ALL TOGETHER | |
| BOOKKEEPING | CHECK INTERNAL DATA DURING PERFORMING TABLE SET. B (REFER TO BOOKKEEPING DATA 1 BELOW) | |
| EXIT | RETURN TO PREVIOUS MENU | |

● PLAYFIELD-SETUP -> TABLE SET. C PERFORM

◇ ROUTINE FUNCTION TEST ON MANUFACTURING (LONG-TERM AGING TEST)
100,000PLAYS ARE AUTOMATICALLYPERFORMED WITH CARDS/TICKETS DISPENSED
BUT, WHEN CARDS ARE NOT DISPENSED, ERROR CODE DOESN'T APPEAR

| LCD DISPLAY | DESCRIPTION | PEFORM |
|---|---|---|
| PUSHER TABLE SET. C | SELECT AND PERFORM | |
| 1 PLAYER STOP | PERFORM ONLY 1P | |
| 2 PLAYER STOP | PERFORM ONLY 2P | |
| 3 PLAYER STOP | PERFORM ONLY 3P | |
| 4 PLAYER STOP | PERFORM ONLY 4P | |
| 1P+2P+3P+4P | PERFORM 1P, 2P, 3P AND 4P ALL TOGETHER | |
| BOOKKEEPING | CHECK INTERNAL DATA DURING PERFORMING TABLE SET. B (REFER TO BOOKKEEPING DATA 1 BELOW) | |
| EXIT | RETURN TO PREVIOUS MENU | |

● PLAYFIELD TEST DATA ON PLAYFIELD-SETUP

| LCD DISPLAY(1P,2P,3P,4P)<br>1P 2P<br>3P 4P | DESCRIPTION |
|---|---|
| ---- CARD PER TOKENS ---<br>50 80<br>50 80 | AVERAGETOKEN QTY PER DISPENSED CARD<br>(TOTAL TOKEN QTY/ TOTAL DISPENSED CARD) |
| ------ PLAY IN ------<br>100 20<br>100 20 | TOTAL PLAY QTY |
| ------- TICKET OUT ------<br>730 960<br>730 960 | TOTAL TICKET OUT QTY |
| ---- CARD DISPENSER ----<br>1 2<br>3 4 | TOTAL CARD OUT QTY FROM CARD DISPENSER |
| --- ELEVATOR HOPPER--<br>100 200<br>300 400 | TOTAL TOKEN-OUT QTY FROM ELEVATOR HOPPER |

| | |
|---|---|
| ---- COUNTER HOPPER ----<br>50 100<br>100 50 | TOTAL TOKEN-OUT QTY FROM COUNTER HOPPER. |
| ----- BONUS DROP1 -----<br>10 11<br>12 13 | THE TOTAL NO. OF BONUS DROP 1 |
| ----- BONUS DROP2 -----<br>20 21<br>22 23 | THE TOTAL NO. OF BONUS DROP 2 |
| ----- BONUS DROP3 -----<br>30 31<br>32 33 | THE TOTAL NO. OF BONUS DROP 3 |
| ----- BONUS DROP4 -----<br>40 41<br>42 43 | THE TOTAL NO. OF BONUS DROP 4 |
| ----- BONUS DROP5 -----<br>50 51<br>52 53 | THE TOTAL NO. OF BONUS DROP 5 |
| ----- BONUS DROP6 -----<br>60 61<br>62 63 | THE TOTAL NO. OF BONUS DROP 6 |
| ----- BONUS DROP7 -----<br>70 71<br>72 73 | THE TOTAL NO. OF BONUS DROP 7 |
| ---- CIRCULATION DROP ----<br>10 11<br>12 13 | THE TOTAL NO. OF BONUS DROP (CENTER) IN CIRCULATION |
| ----- CIRCULATION 1 -----<br>20 21<br>22 23 | THE TOTAL NO. OF CIRCULATION FND 1 |
| ----- CIRCULATION 2 -----<br>30 31<br>32 33 | THE TOTAL NO. OF CIRCULATION FND 2 |
| ----- CIRCULATION 3 -----<br>40 41<br>42 43 | THE TOTAL NO. OF CIRCULATION FND 3 |
| ----- CIRCULATION 4 -----<br>50 51<br>52 53 | THE TOTAL NO. OF CIRCULATION FND 4 |

| | |
|---|---|
| ----- CIRCULATION 5 -----<br>60 61<br>62 63 | THE TOTAL NO. OF CIRCULATION FND 5 |
| ----- CIRCULATION 6 -----<br>70 71<br>72 73 | THE TOTAL NO. OF CIRCULATION FND 6 |
| CANCEL : RETURN TO PREVIOUS MENU. | |

## ◆ NOMAL LCD DISPLAY BEFORE ENTERING OPERATION MENU(MODE)

**BOOKKEEPING DATA** CONFIRM WITH [↑ ↓] BUTTON

| **LCD DISPLAY**<br>**1P 2P**<br>**3P 4P** | **DESCRIPTION** |
|---|---|
| ---- CARD PER TOKENS ---<br>50 80<br>50 80 | AVERAGE TOKEN QTY PER DISPENSED CARD<br>(TOTAL TOKEN QTY/ TOTAL DISPENSED CARD) |
| --------- COIN IN -------<br>12 25<br>12 25 | TOTAL COIN IN. QTY |
| -------- BILL IN --------<br>1 3<br>1 3 | TOTAL BILL IN. QTY<br>ACCUMULATED INPUT PULSE QTY |
| ------- SERVICE IN -------<br>10 5<br>10 5 | TOTAL SERVICE IN. QTY |
| -------- PLAY IN --------<br>100 20<br>100 20 | TOTAL PLAY QTY |
| ------- TICKET OUT ------<br>730 960<br>730 960 | TOTAL TICKET OUT QTY |
| -- CARD DISPENSER --<br>1 2<br>3 4 | TOTAL CARD OUT QTY FROM CARD DISPENSER |
| ---- ELEVATOR HOPPER ---<br>100 200<br>300 400 | TOTAL TOKEN-OUT QTY FROM ELEVATOR HOPPER |
| ---- COUNTER HOPPER ----<br>50 100<br>100 50 | TOTAL TOKEN-OUT QTY FROM COUNTER HOPPER |

# [ PAYOUT SETTING ]

| PLAY FEE | SETTING | |
|---|---|---|
| $1 | TICKET / TOKEN | 0.5 |
| | TOKENS / CARD | 200 |
| | PLAYS / COIN | 1st COIN: 12; 2nd COIN: 26; 3th COIN: 42; 4th COIN: 60; 5th COIN: 75 |
| | PLAY / BILL | 1 BILL: 12; 2 BILL: 26; 3 BILL: 42; 4 BILL: 60; 5 BILL: 75; 10 BILL: 175; 20 BILL: 400 |
| | CIRC. FND | 1: 5; 2: 3; 3: 1; 4: 1; 5: 3; 6: 5 |
| $1.6 | TICKET / TOKEN | 1 |
| | TOKENS / CARD | 200 |
| | PLAYS / COIN | 1st COIN: 12; 2nd COIN: 26; 3th COIN: 42; 4th COIN: 60; 5th COIN: 75 |
| | PLAY / BILL | 1 BILL: 12; 2 BILL: 26; 3 BILL: 42; 4 BILL: 60; 5 BILL: 75; 10 BILL: 175; 20 BILL: 400 |
| | CIRC. FND | 1: 6; 2: 4; 3: 2; 4: 2; 5: 4; 6: 6 |
| $2 | TICKET / TOKEN | 1 |
| | TOKENS / CARD | 200 |
| | PLAYS / COIN | 1st COIN: 25; 2nd COIN: 55; 3th COIN: 90; 4th COIN: 130; 5th COIN: 175 |
| | PLAY / BILL | 1 BILL: 12; 2 BILL: 26; 3 BILL: 42; 4 BILL: 60; 5 BILL: 75; 10 BILL: 175; 20 BILL: 400 |
| | CIRC. FND | 1: 5; 2: 3; 3: 1; 4: 1; 5: 3; 6: 5 |

## 5-5. ERROR CODE

| CODE<br>( TOKENS FND ) | CONTENTS | ERROR DESCRIPTION<br>**(REBOOTING AFTER TROBLE SHOOTING)** |
|---|---|---|
| **E.02** | **COIN ERROR** | 1. COIN JAM<br>( 'COIN JAM' Trouble shooting in the coin acceptor ) |
| **E.03** | **CIRCULATION ERROR** | 1. CIRCULATION MEDAL JAM INSIDE OR NO MEDAL<br>( Remove the acrylic plate OR Pull down jammed medal using magnet outside of acrylic plate )<br>2. MALFUNCTION OF UPPER SENSOR<br>( TEST MODE -> CIRCULATION TEST : Check Circulator's operation ) |
| **E.04** | **PUSHER ERROR** | 1. MALFUNCTION OF AC MOTOR OR SENSOR<br>( TEST MODE -> PUSHER TEST : Check MOTOR's operation )<br>2. MEDAL JAM at the PUSHER's bottom part or either side of upper part. |
| **E.05** | **COUNTER HOPPER ERROR** | 1. MALFUNCTION OF MOTOR OR SENSOR<br>( TEST MODE -> COUNTER HOPPER TEST : Check operation )<br>2. CONVEYER Check operation<br>( TEST MODE -> CONVEYER TEST Check operation ) |
| **E.06** | **ELEVATOR HOPPER ERROR** | 1. MALFUNCTION OF MOTOR OR SENSOR<br>( TEST MODE -> ELEVATOR HOPPER TEST Check operation )<br>2. NO MEDAL IN THE ELEVAOTR HOPPER<br>( Check MEDAL was dropped around. )<br>3. MEDAL JAM AT THE RAIL WHERE MEDAL WAS EMITTED<br>( Remove MEDAL at the RAIL )<br>4. Check COUNTER HOPPER's operation<br>( TEST MODE -> COUNTER HOPPER TEST : Check operation )<br>5. Check CONVEYER's operation<br>( TEST MODE -> CONVEYER TEST : Check operation )<br>6. In case of MEDAL wasn't emitted even though there is MEDAL in the ELEVAOTR HOPPER<br>( Tap the bucket lightly several times. ) |
| **E.07** | **CIRCULATION WIPER ERROR** | 1. MALFUNCTION OF MOTOR OR SENSOR<br>( TEST MODE -> CIRCULATION TEST : Check operation ) |
| **E.08** | **CONVEYER ERROR** | 1. MALFUNCTION OF MOTOR OR SENSOR<br>( TEST MODE -> CONVEYER TEST : Check operation )<br>2. MEDAL JAM at the bottom part or upper part. |

| | | |
|---|---|---|
| **E.08** | **CONVEYER ERROR** | 1. MALFUNCTION OF MOTOR OR SENSOR<br>( TEST MODE -> CONVEYER TEST : Check operation )<br>2. MEDAL JAM at the bottom part or upper part.<br>( TROBLE SHOOTING MEDAL JAM ) |
| **E.09** | **CIRCULATION ENCODER SENSOR ERROR** | 1. MALFUNCTION OF MOTOR OR ENCODER SENSOR<br>( TEST MODE -> CIRCULATION TEST : Check operation )<br>2. Check the clearance of the acrylic panel.<br>( Adjust to spin it by hand and the clearance is less than 2cm ) |
| **E.10** | **CIRCULATION MAGNETIC SENSOR PCB ERROR** | 1. MALFUNCTION OF SENSOR PCB in the bottom part of CIRCULATION<br>( TEST MODE -> CIRCULATION TEST : Check operation ) |
| **E.11** | **CARD DISPENSER ERROR** | 1. CARD EMPTY<br>2. CARD JAM<br>( CARDS need to be shuffled when it put and lay in the H frame. ) |
| **E.20** | **SETUP LCD ERROR** | 1. MALFUNCTION OF SETUP LCD<br>( Check the connection of MAIN BOARD connector ) |
| **E.21** | **CONNECT ERROR** | 1. MALFUNCTION OF COMMUNICATION CONNECTION<br>( Check the DIP-SWITCH ID of MAIN BOARD or connector line. ) |
| **E.22** | **PROGRAM VERSION ERROR** | 1. MISMATCH ON EACH MAIN BOARD OF PROGRAM VERSION |
| **E.23** | **BACKUP SETUP DATA ERROR** | 1. SETUP STORAGE DATA ERROR<br>( Rebooting the Machine. Then Clear error.<br>CPU PCB needs to be changed if it occurs continuously.) |
| **E.24** | **BACKUP GAME DATA ERROR** | 1. SETUP STORAGE DATA ERROR<br>( Rebooting the Machine. Then Clear error.<br>CPU PCB needs to be changed if it occurs continuously.) |
| **TILT ERROR** | **DISPLAY BONUS FND** | It occurs machine was shaken. It automatically recovers after 15 seconds. |

## * HOW TO SET ID

EACH P(PLAYER)HAS EACH OWN MAINBOARD. SO, THEY COMMUNICATE THROUGH ID OF THEIR OWN.
MAKE SURE TO SET DIP SWITCH AS SHOWN PHOTOS BELOW.

| | | |
|---|---|---|
| 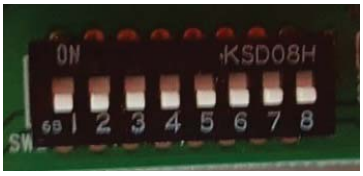 | 1P ID DIP SWITCH (SUPERMAN) | 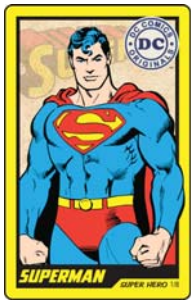 |
| 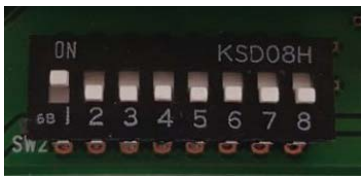 | 2P ID DIP SWITCH (WONDER WOMAN) | |
| 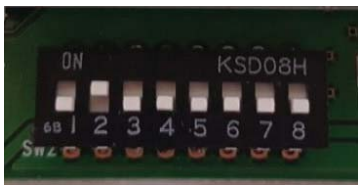 | 3P ID DIP SWITCH (BATMAN) | |
| 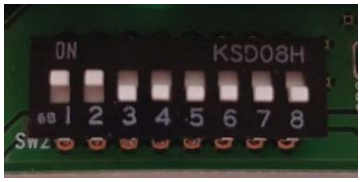 | 4P ID DIP SWITCH (FLASH) | |
| 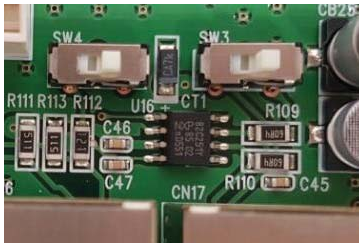 | 1P, 2P, 3P COMMUNICATION DIP SWITCH | |
| 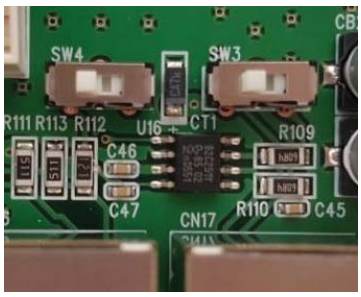 | 4P COMMUNICATION DIP SWITCH | |

## * IN CASE OF MAIN PCB REPAIR FOR ALL KINDS OF THE TROUBLE SITUATIONS AS FOLLOW ;

- If the defect occurs among 1, 2, 3P's Main PCBs, replace main PCB of 4P as shown below in the following picture.
  : Regard as 4P was defected P, connect 1, 2,3P to main PCB step by step then you can operate.

- Then, use each DIP S/W to adjust the setting as shown in the following picture.

| | | | |
|---|---|---|---|
| | | | |
| 1P ID D/W (SUPERMAN) | 2P ID D/W (WONDER WOMAN) | 3P ID D/W (BATMAN) | 4P ID D/W (FLASH) |

[ EX ]

- For example, if the 2P main PCB was defected as indicated, replace 4P main PCB then change the setting as like 2P DIP S/W.

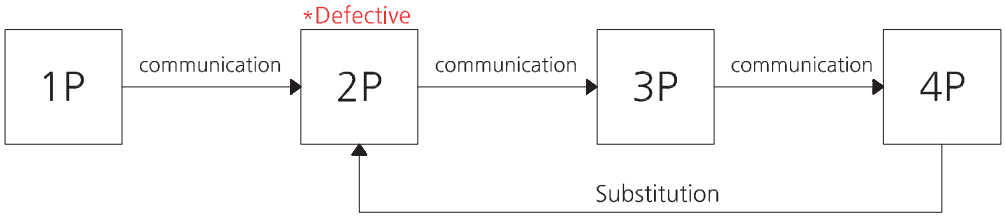


- Normal communication can be achieved only when each P's DIP S/W is changed.

*Common: Check the input voltage, check wiring

# 6. TROUBLESHOOTING

## 6-1. IN CASE OF POWER FAILURE

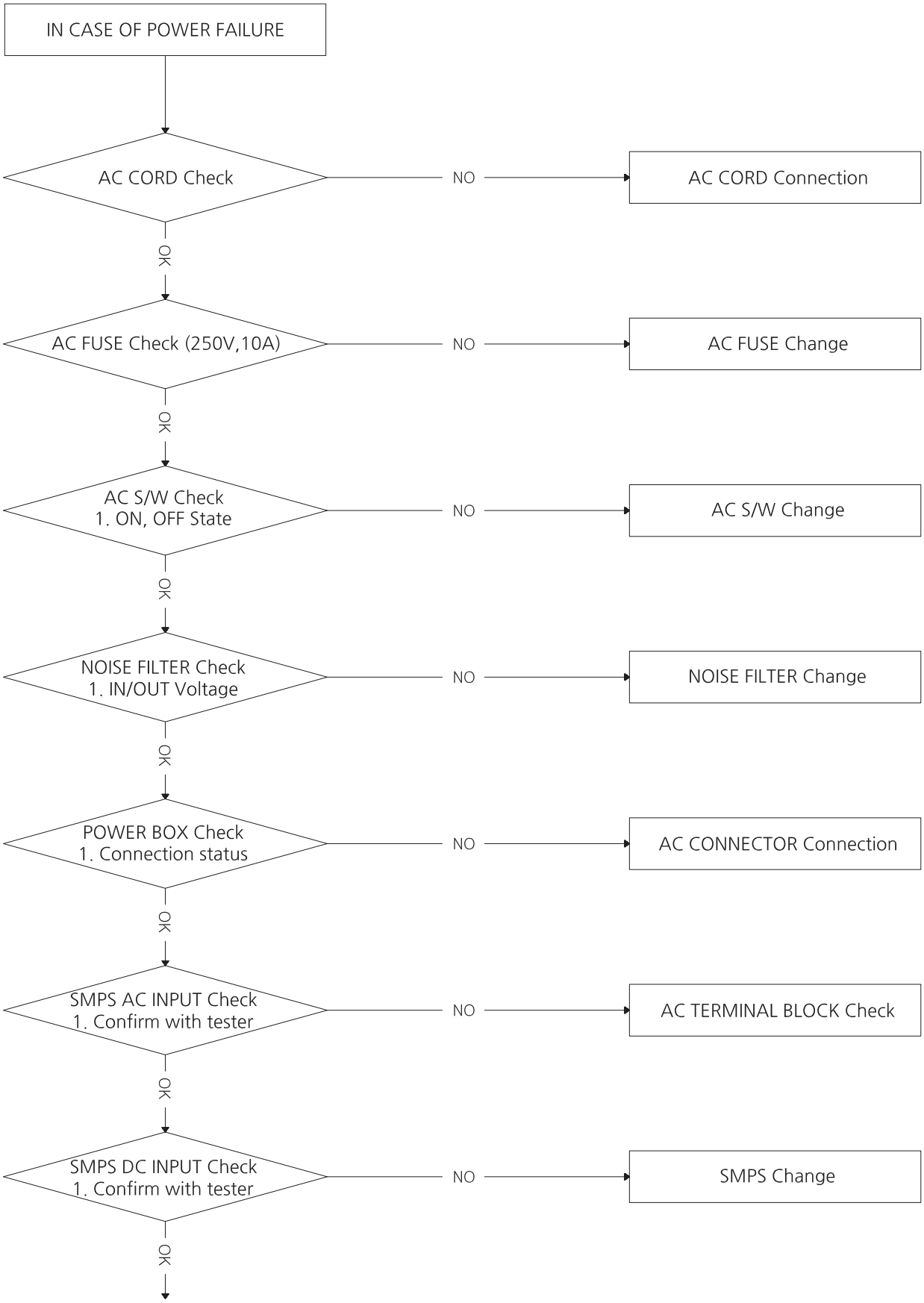

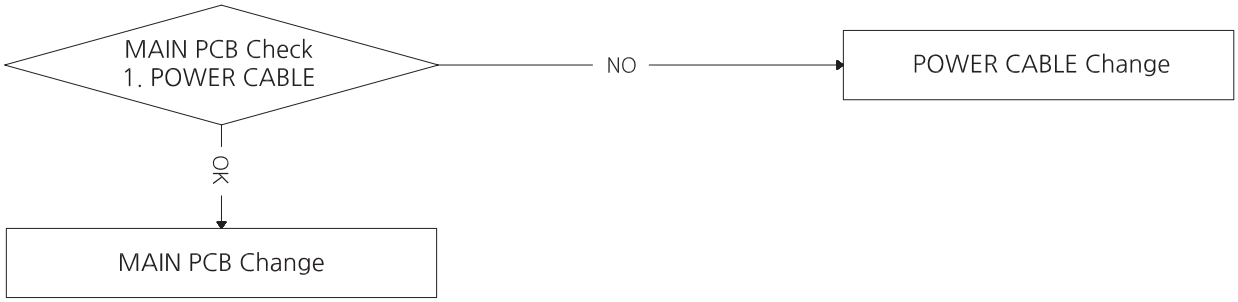
MAIN PCB Check
1. POWER CABLE
NO
POWER CABLE Change
OK
MAIN PCB Change

*Common: Check the input voltage, check wiring

# 6-2. MEDAL CIRCULATION FND, CENTER FND PCB ERROR [1~4P]

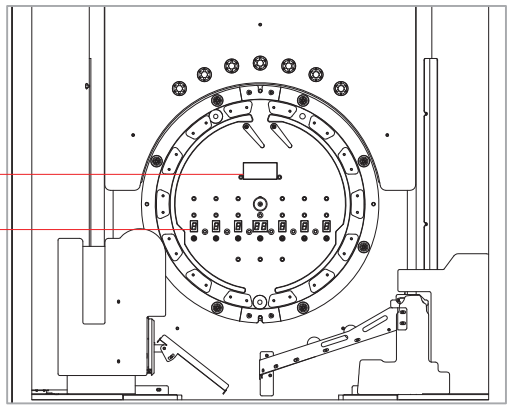


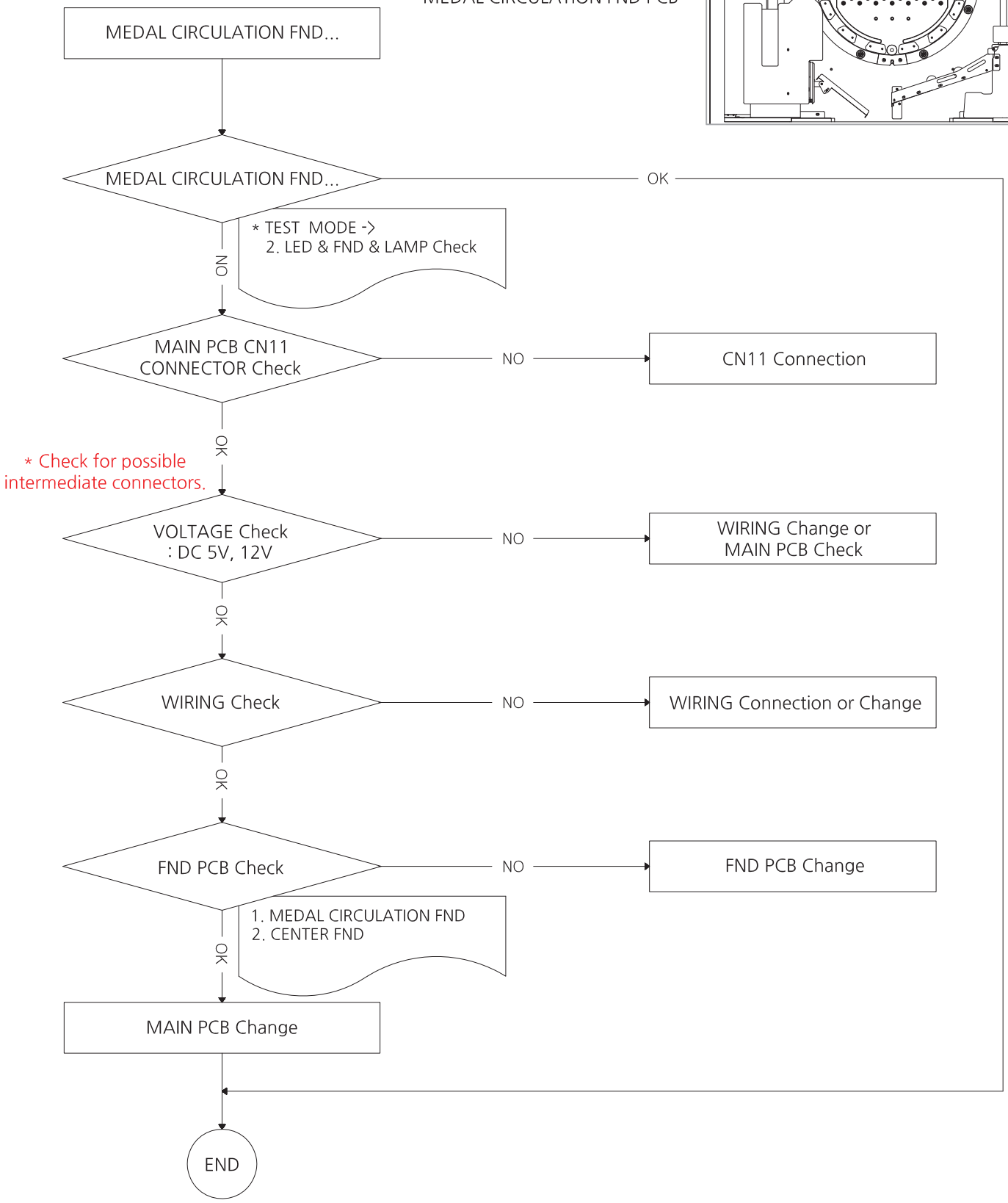

# 6-3. TICKETS, TOKENS, JACKPOT FND PCB ERROR [1~4P]

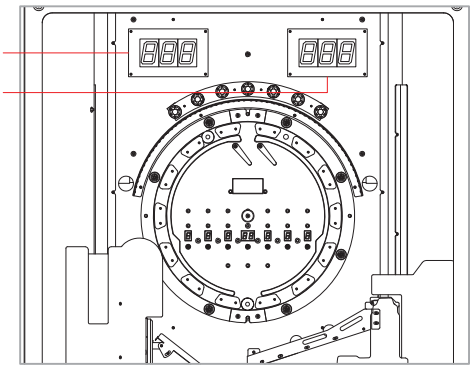


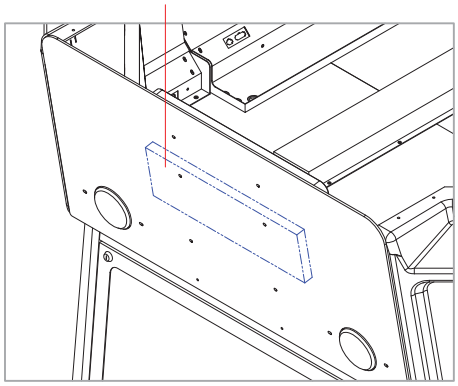


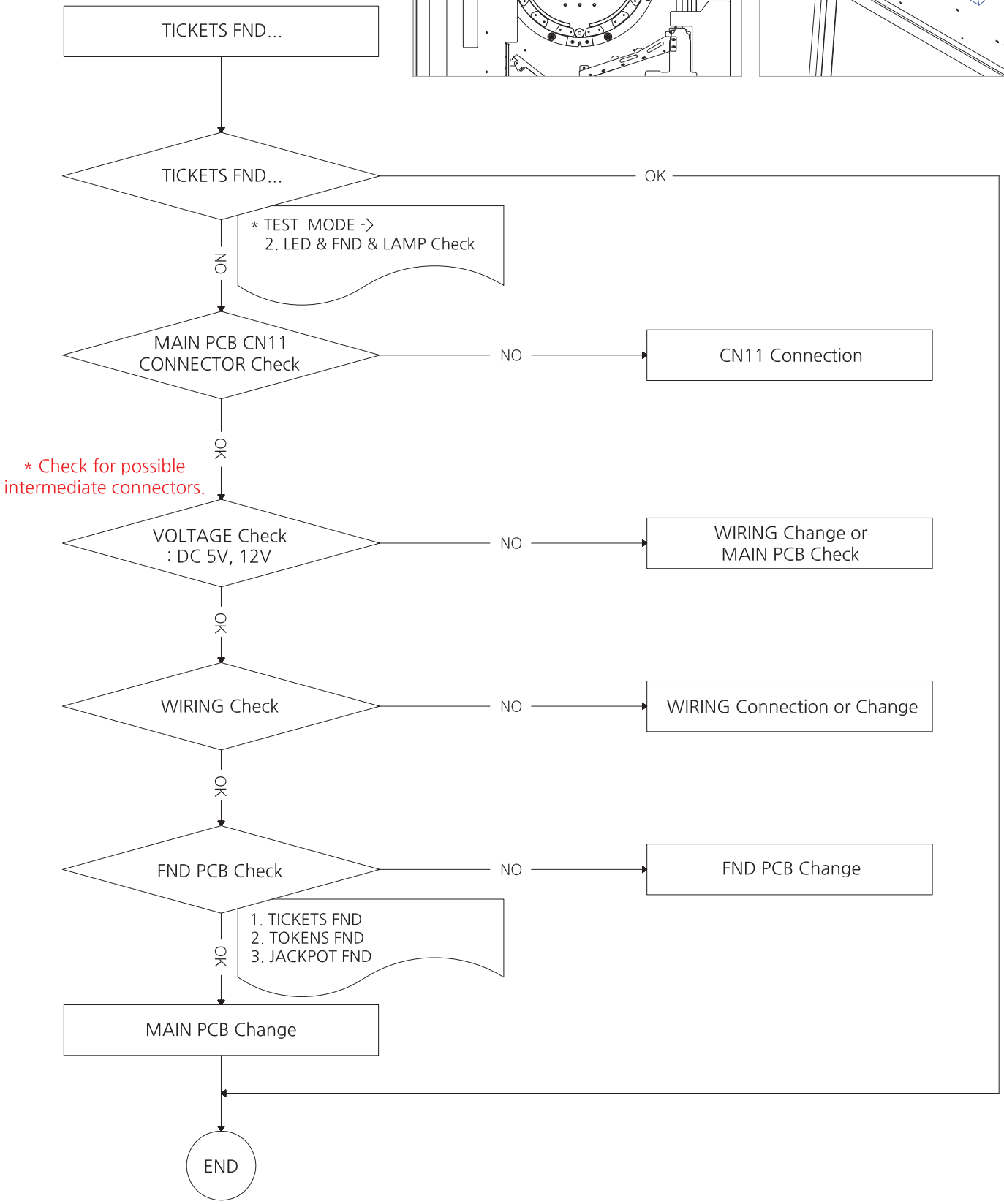

*Common: Check the input voltage, check wiring

# 6-4. WHEEL SPIN LED PCB ERROR [1~4P]

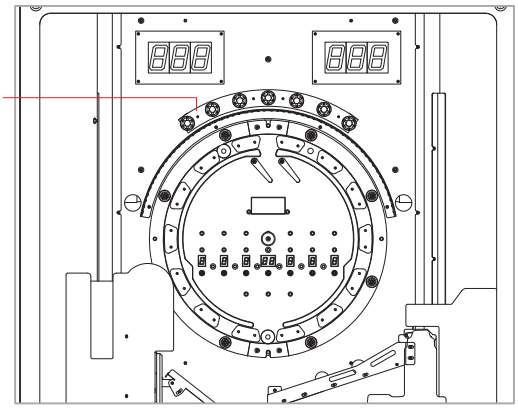


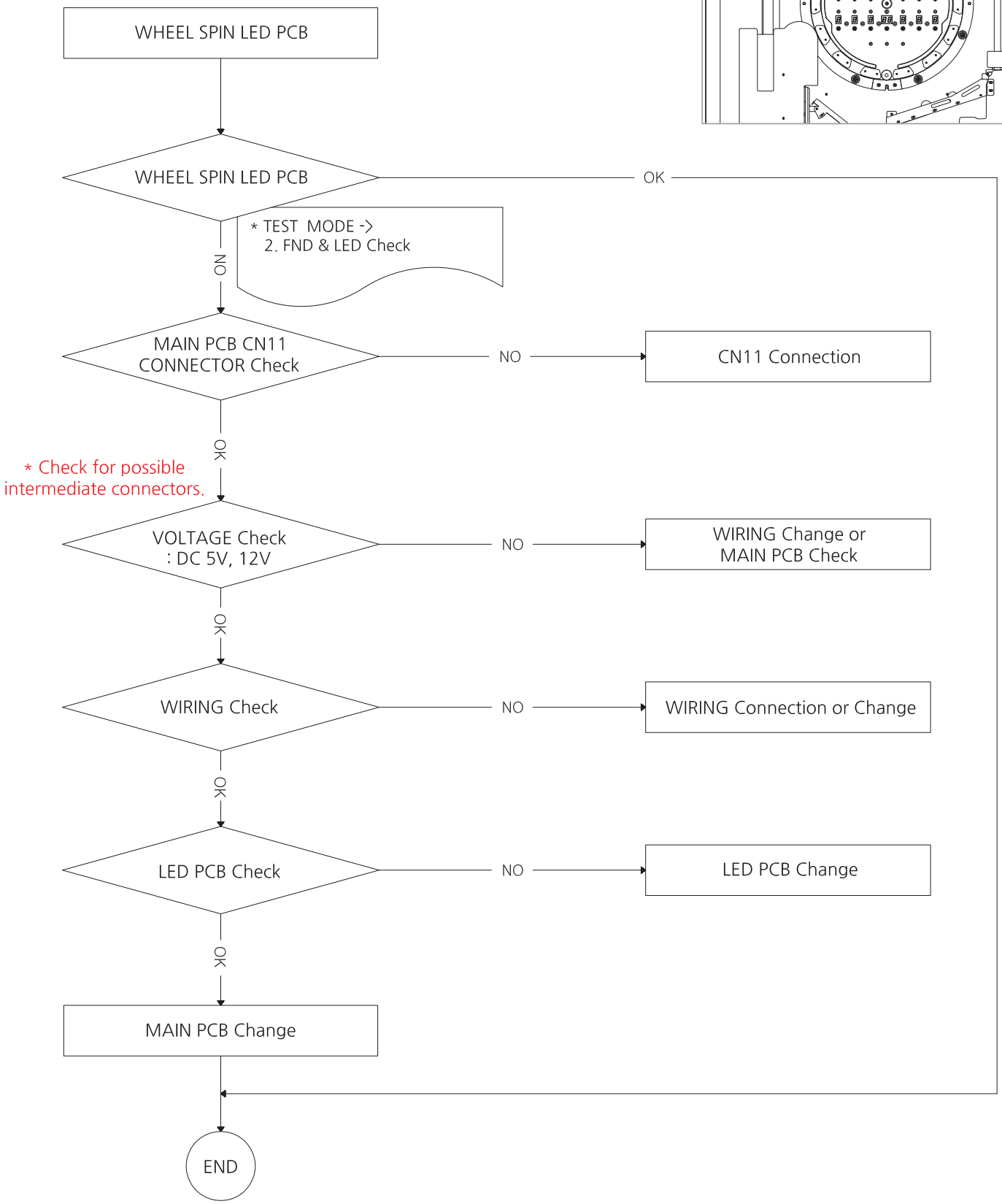

*Common: Check the input voltage, check wiring

# 6-5. BUTTON LED PCB ERROR [1~4P]

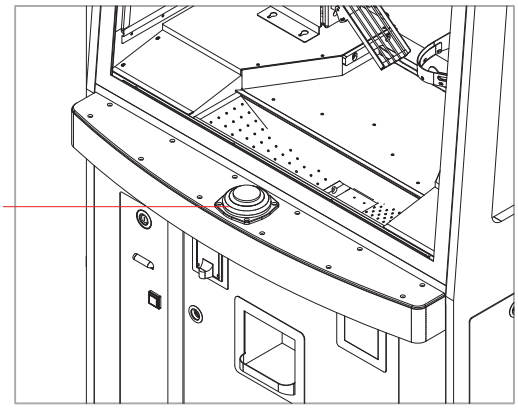


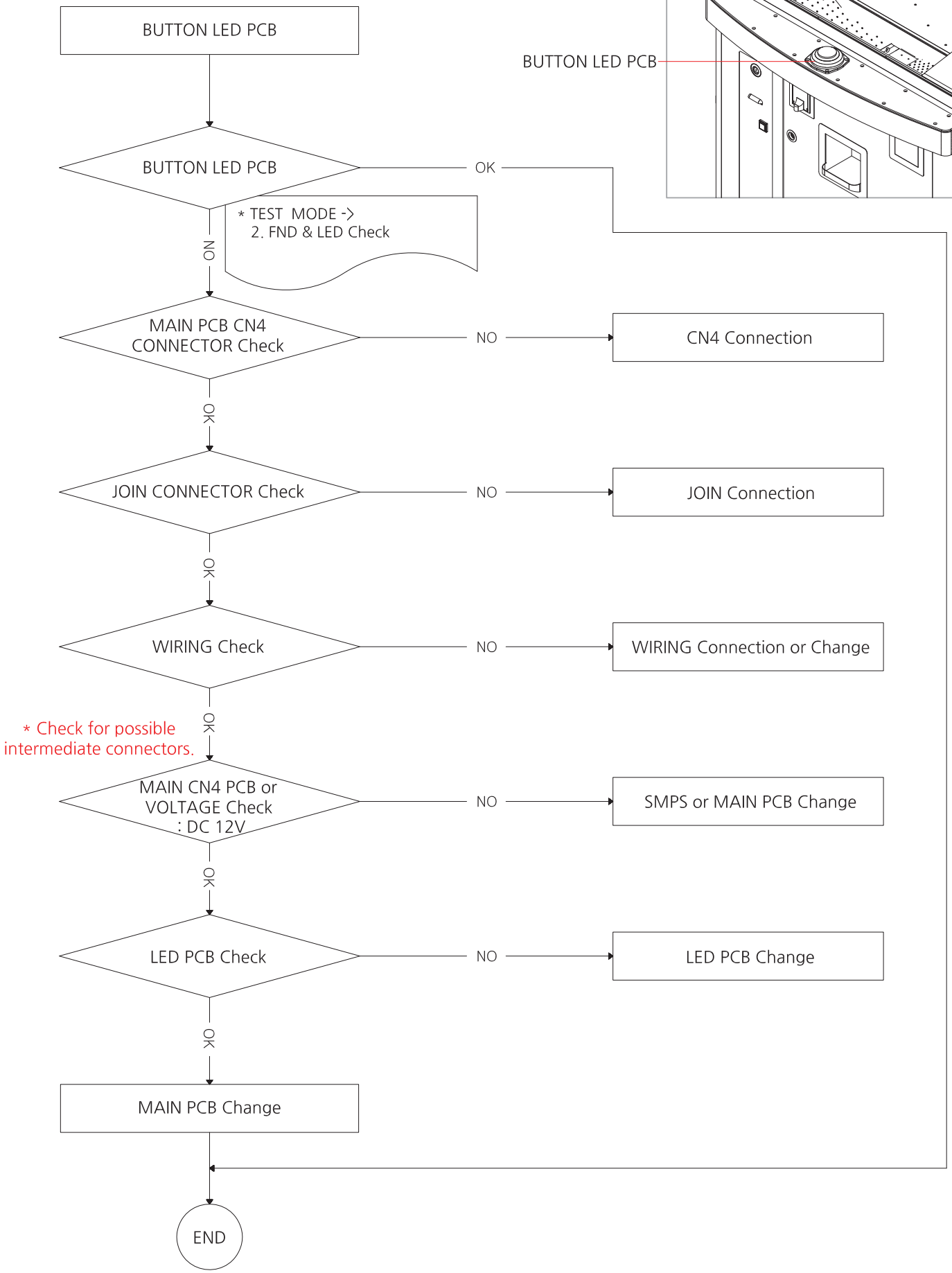

# 6-6. SIDE FLEX LED, TOP FLEX LED PCB ERROR [1~4P]

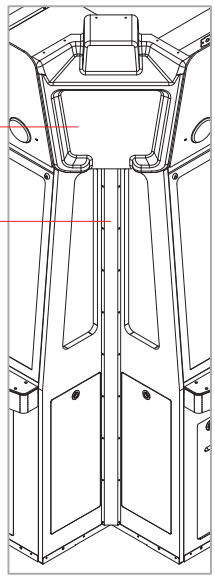


SIDE FLEX LED...

SIDE FLEX LED... — OK → RGB PWM MODULE PCB Connection

* TEST MODE ->
2. FND & LED Check

NO

RGB PWM MODULE PCB CONNECTION Check — NO → RGB PWM MODULE PCB Connection

OK

JOIN CONNECTION Check — NO → JOIN Connection

OK

WIRING Check — NO → WIRING Connection or Change

OK

* Check for possible intermediate connectors.

RGB PWM MODULE PCB VOLTAGE Check : DC 12V — NO → RGB PWM MODULE PCB Change

OK

LED PCB Check — NO → LED PCB Change

1. SIDE FLEX LED
2. TOP FLEX LED

OK

* Check for possible intermediate connectors.

VOLTAGE Check : DC 12V — NO → SMPS Change

MAIN PCB Change

END

# 6-7. ARC FLEX LED, DOOR LED, TABLE LED, TOP LED ERROR [1~4P]

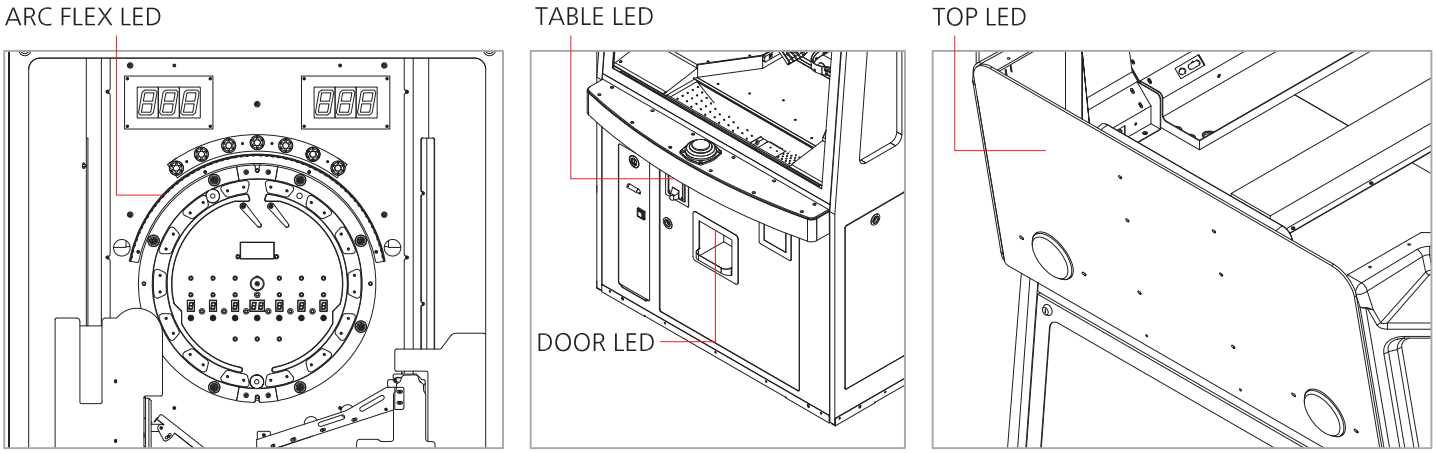


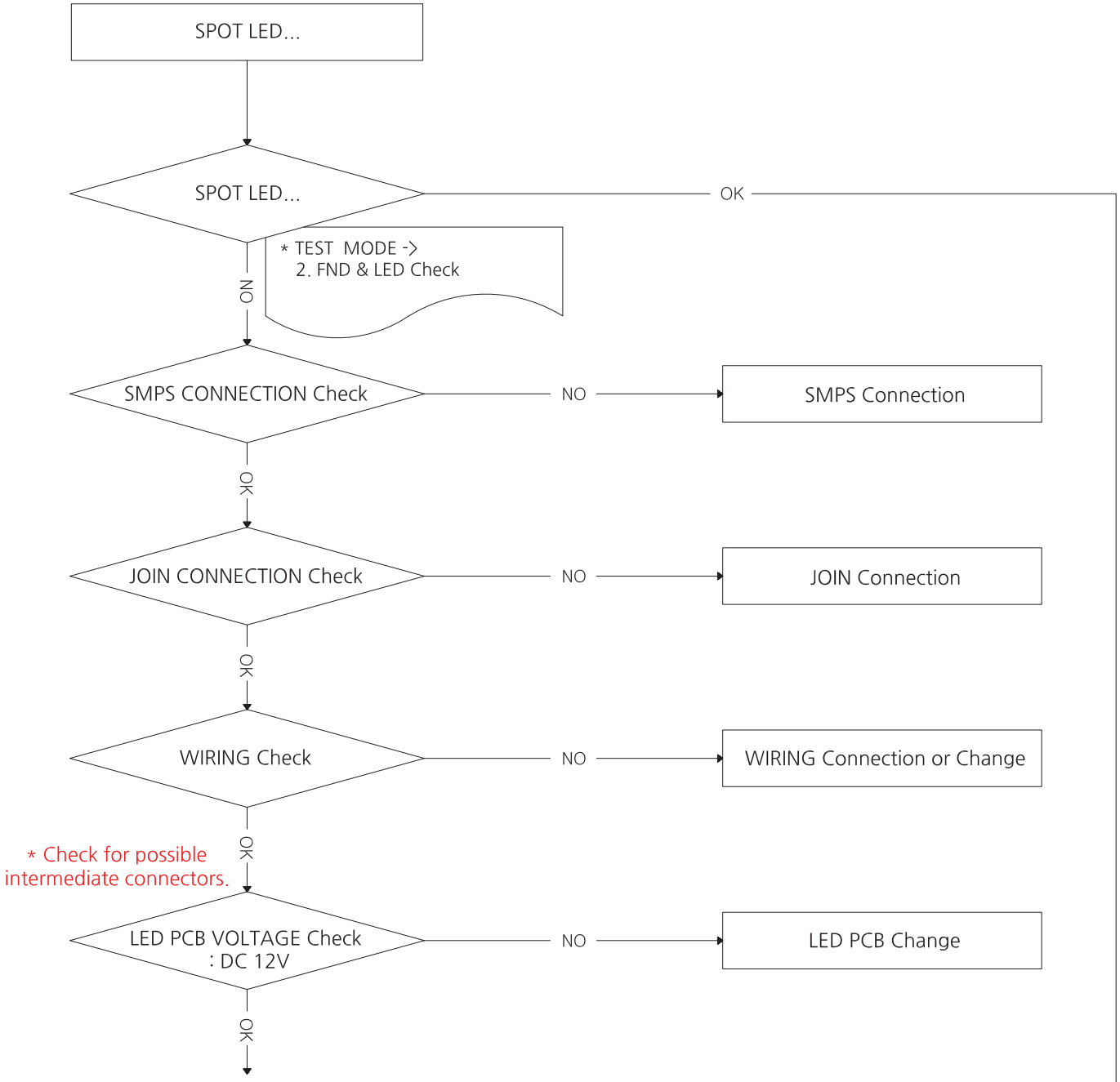

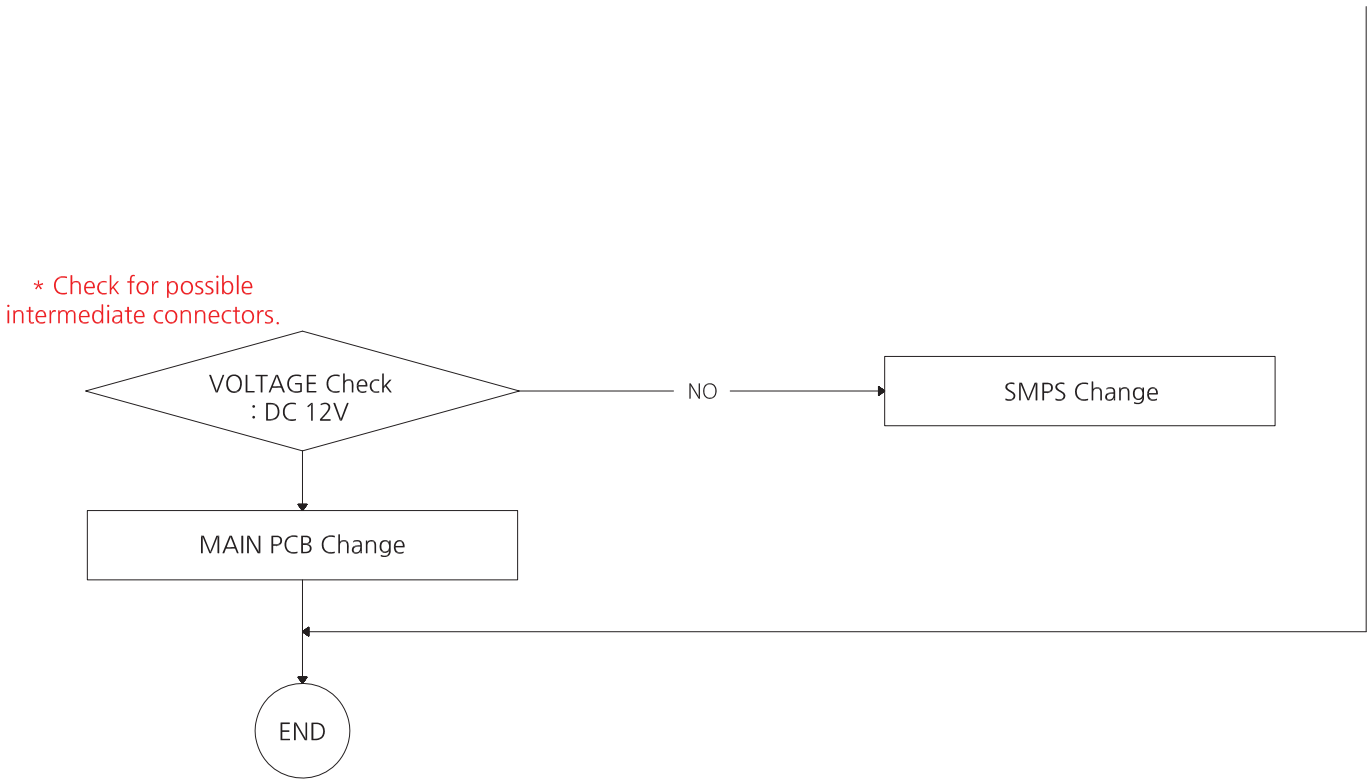
* Check for possible
intermediate connectors.
VOLTAGE Check
: DC 12V
NO
SMPS Change
MAIN PCB Change
END

# 6-8. TICKET DISPENSER ERROR [1~4P]

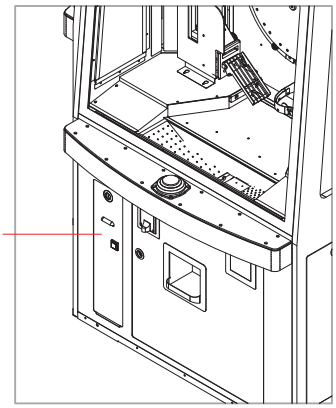


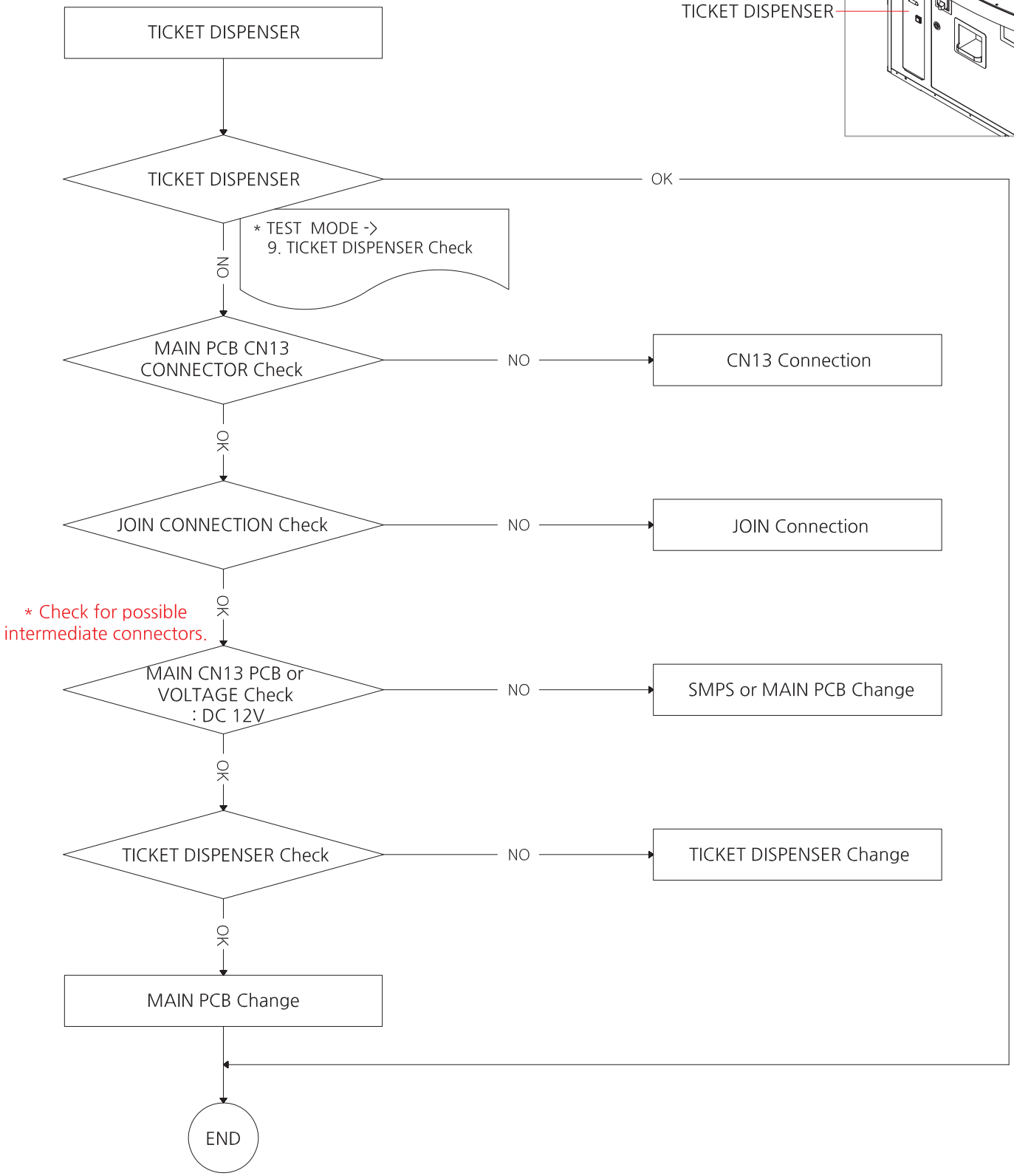

# 6-9. IN CASE OF MALFUNCTION OF PUSHER [1~4P] - ERROR 04

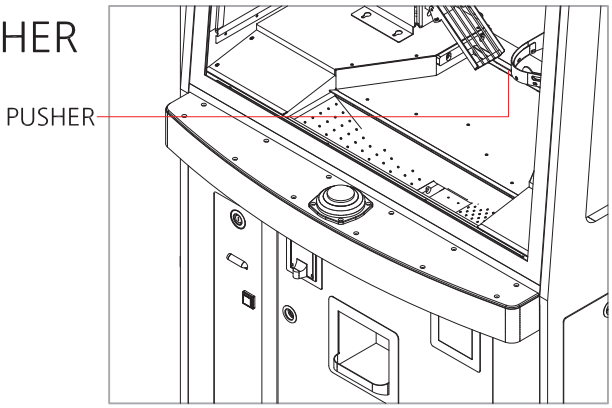


* CAUSE - COIN REMOVAL

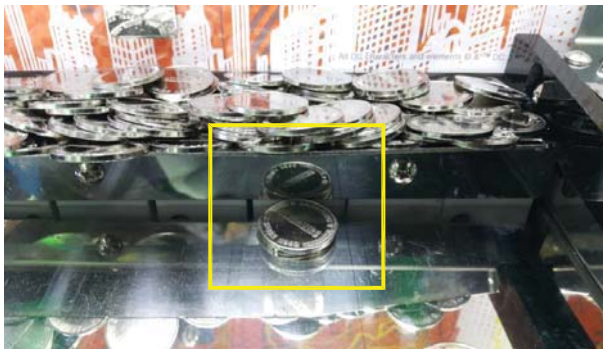

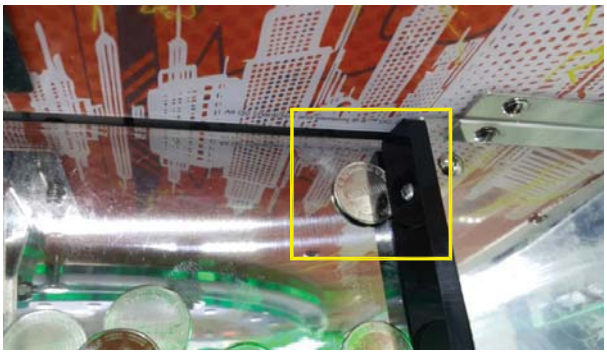

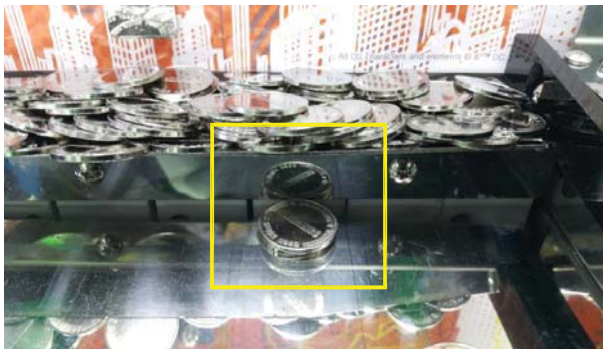

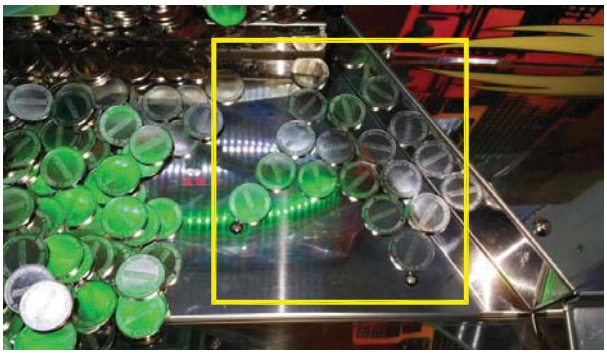

* If the error can not be cleared by resetting, unfold a coin of the screw of the PUSHER Plate and press the reset button.

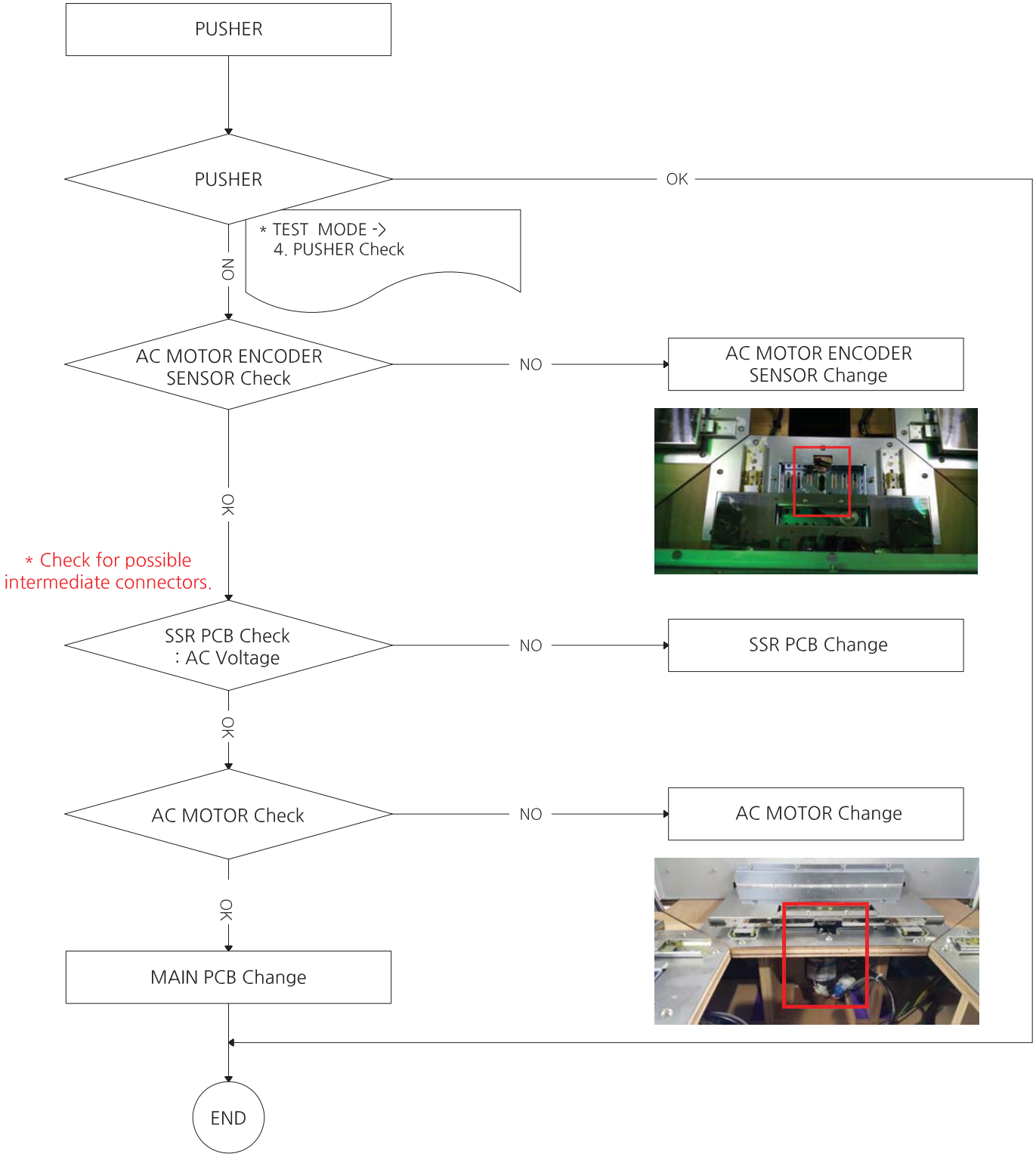
PUSHER
PUSHER
OK
* TEST MODE ->
4. PUSHER Check
NO
AC MOTOR ENCODER SENSOR Check
NO
AC MOTOR ENCODER SENSOR Change
OK
* Check for possible intermediate connectors.
SSR PCB Check : AC Voltage
NO
SSR PCB Change
OK
AC MOTOR Check
NO
AC MOTOR Change
OK
MAIN PCB Change
END

# 6-10. COUNTER HOPPER ERROR [1~4P] - ERROR 05

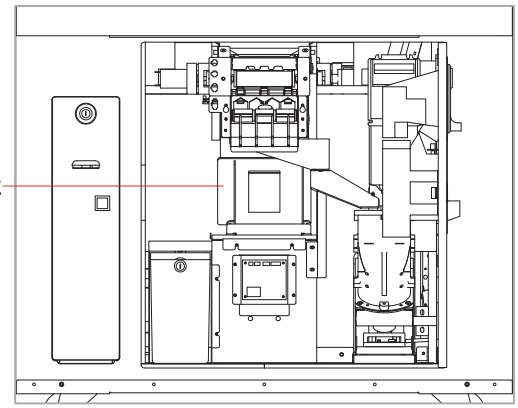


COUNTER HOPPER

COUNTER HOPPER Check — OK

* TEST MODE ->
6. COUNTER HOPPER Check

NO

CONVEYER(JAM, MOTOR) Check — NO → Remove medal or Motor Change

OK

HOPPER INTERNAL Check — NO → Bad medal or Remove foreign matter

OK

HOPPER CASE Check — NO → HOPPER CASE Change

OK

COIN GUIDE PLATE "B"(SPIN) Check — NO → COIN GUIDE PLATE "B"(SPIN) Change

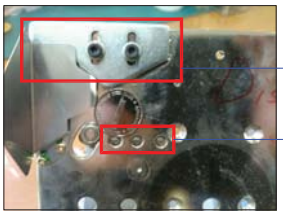


OK

COIN GUIDE PLATE Check — NO → COIN GUIDE PLATE Control

OK

MAIN PCB CN20 CONNECTOR Check — NO → CN20 Connection

OK

MAIN PCB CN6 CONNECTOR Check — NO → CN6 Connection

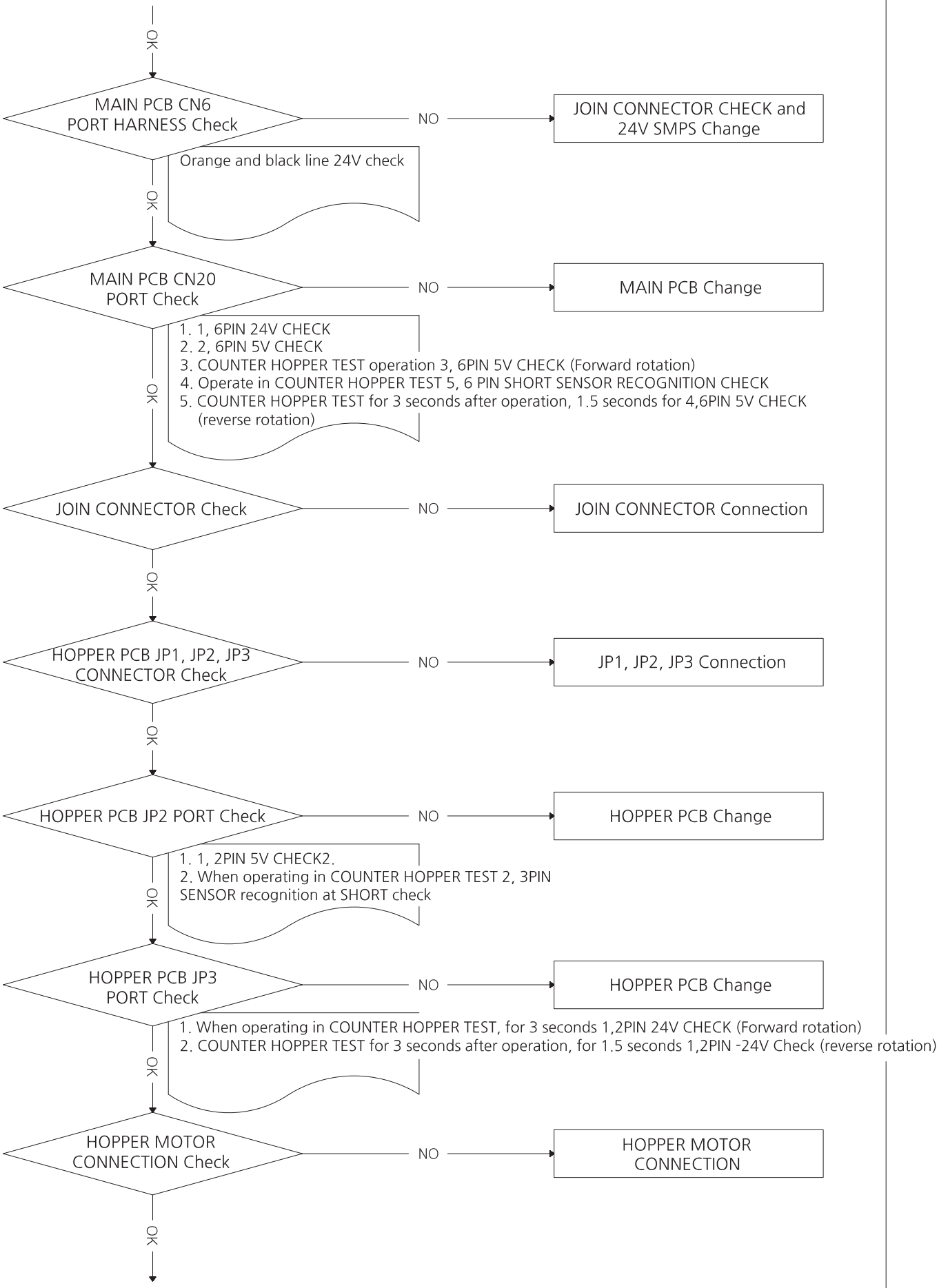
OK
MAIN PCB CN6
PORT HARNESS Check
NO
JOIN CONNECTOR CHECK and
24V SMPS Change
Orange and black line 24V check
OK
MAIN PCB CN20
PORT Check
NO
MAIN PCB Change
1. 1, 6PIN 24V CHECK
2. 2, 6PIN 5V CHECK
3. COUNTER HOPPER TEST operation 3, 6PIN 5V CHECK (Forward rotation)
4. Operate in COUNTER HOPPER TEST 5, 6 PIN SHORT SENSOR RECOGNITION CHECK
5. COUNTER HOPPER TEST for 3 seconds after operation, 1.5 seconds for 4,6PIN 5V CHECK
(reverse rotation)
OK
JOIN CONNECTOR Check
NO
JOIN CONNECTOR Connection
OK
HOPPER PCB JP1, JP2, JP3
CONNECTOR Check
NO
JP1, JP2, JP3 Connection
OK
HOPPER PCB JP2 PORT Check
NO
HOPPER PCB Change
1. 1, 2PIN 5V CHECK2.
2. When operating in COUNTER HOPPER TEST 2, 3PIN
SENSOR recognition at SHORT check
OK
HOPPER PCB JP3
PORT Check
NO
HOPPER PCB Change
1. When operating in COUNTER HOPPER TEST, for 3 seconds 1,2PIN 24V CHECK (Forward rotation)
2. COUNTER HOPPER TEST for 3 seconds after operation, for 1.5 seconds 1,2PIN -24V Check (reverse rotation)
OK
HOPPER MOTOR
CONNECTION Check
NO
HOPPER MOTOR
CONNECTION
OK

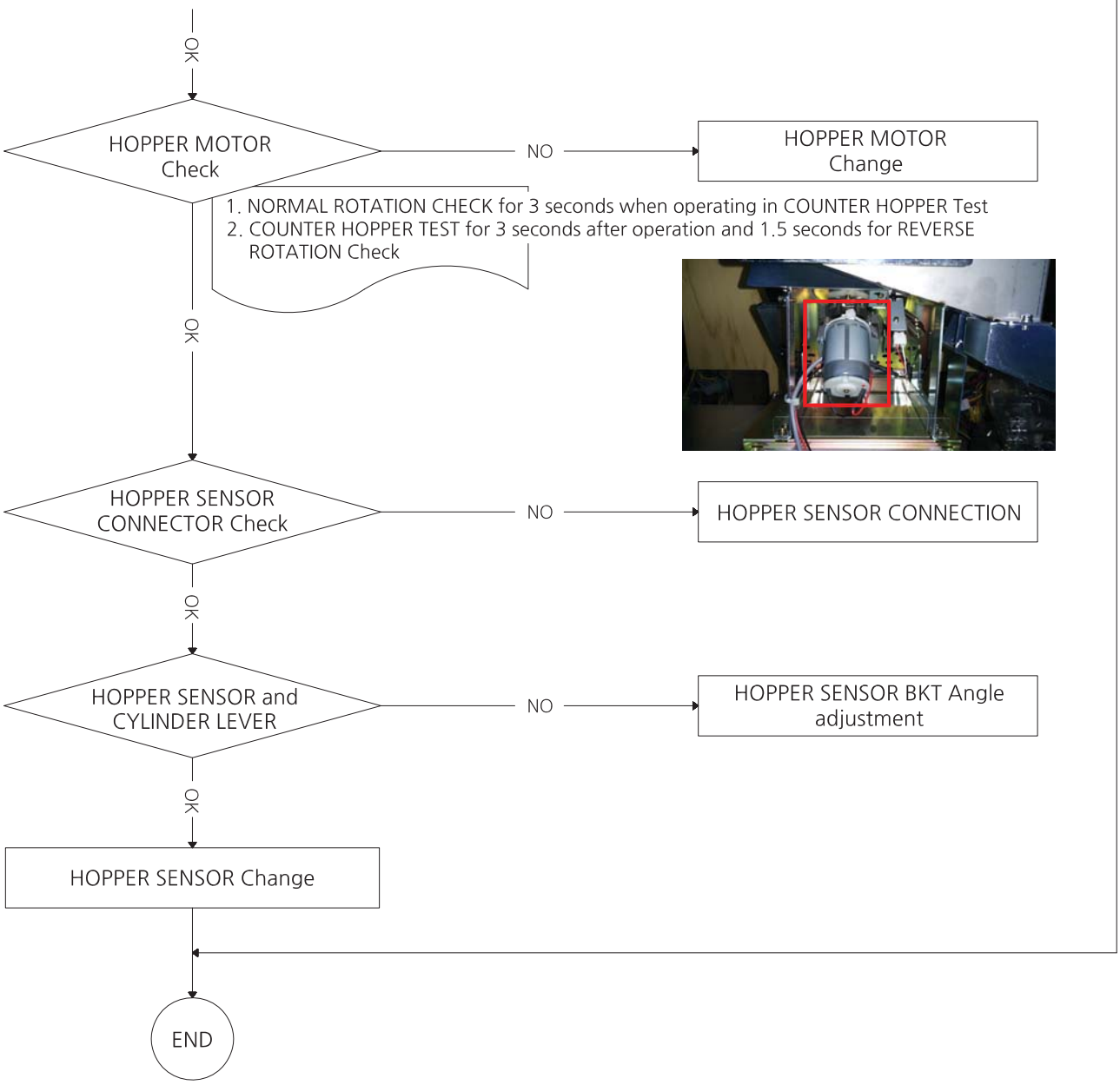
OK
HOPPER MOTOR Check
NO
HOPPER MOTOR Change
1. NORMAL ROTATION CHECK for 3 seconds when operating in COUNTER HOPPER Test
2. COUNTER HOPPER TEST for 3 seconds after operation and 1.5 seconds for REVERSE ROTATION Check
OK
HOPPER SENSOR CONNECTOR Check
NO
HOPPER SENSOR CONNECTION
OK
HOPPER SENSOR and CYLINDER LEVER
NO
HOPPER SENSOR BKT Angle adjustment
OK
HOPPER SENSOR Change
END

# 6-11. ELEVATOR HOPPER ERROR [1~4P] - ERROR 06

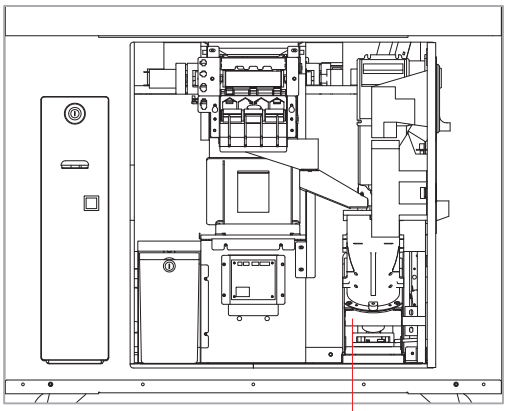


* CAUSE - COIN REMOVAL

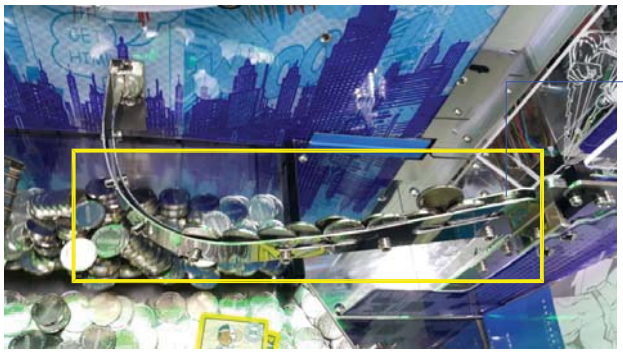

BONUS RAIL

: IF YOU BONUS RAIL IS FULL OF COINS, REMOVE IT AND START OPERATION.

* CAUSE - LACK OF COIN or COIN JAM

* CAUSE - ELEVATOR RAIL COIN JAM

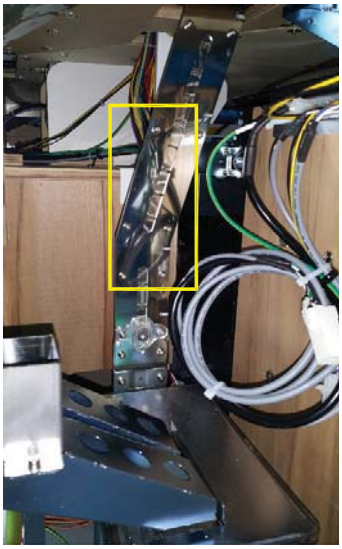

* CAUSE - COIN OUT SENSOR

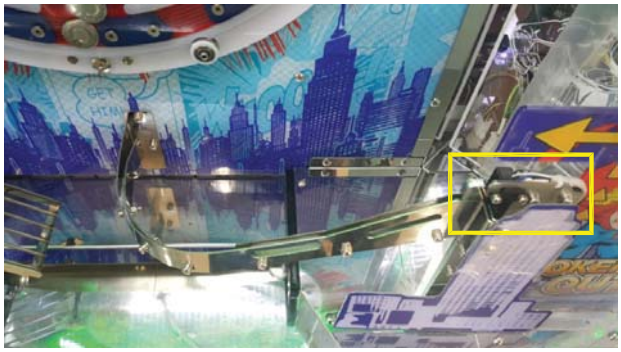

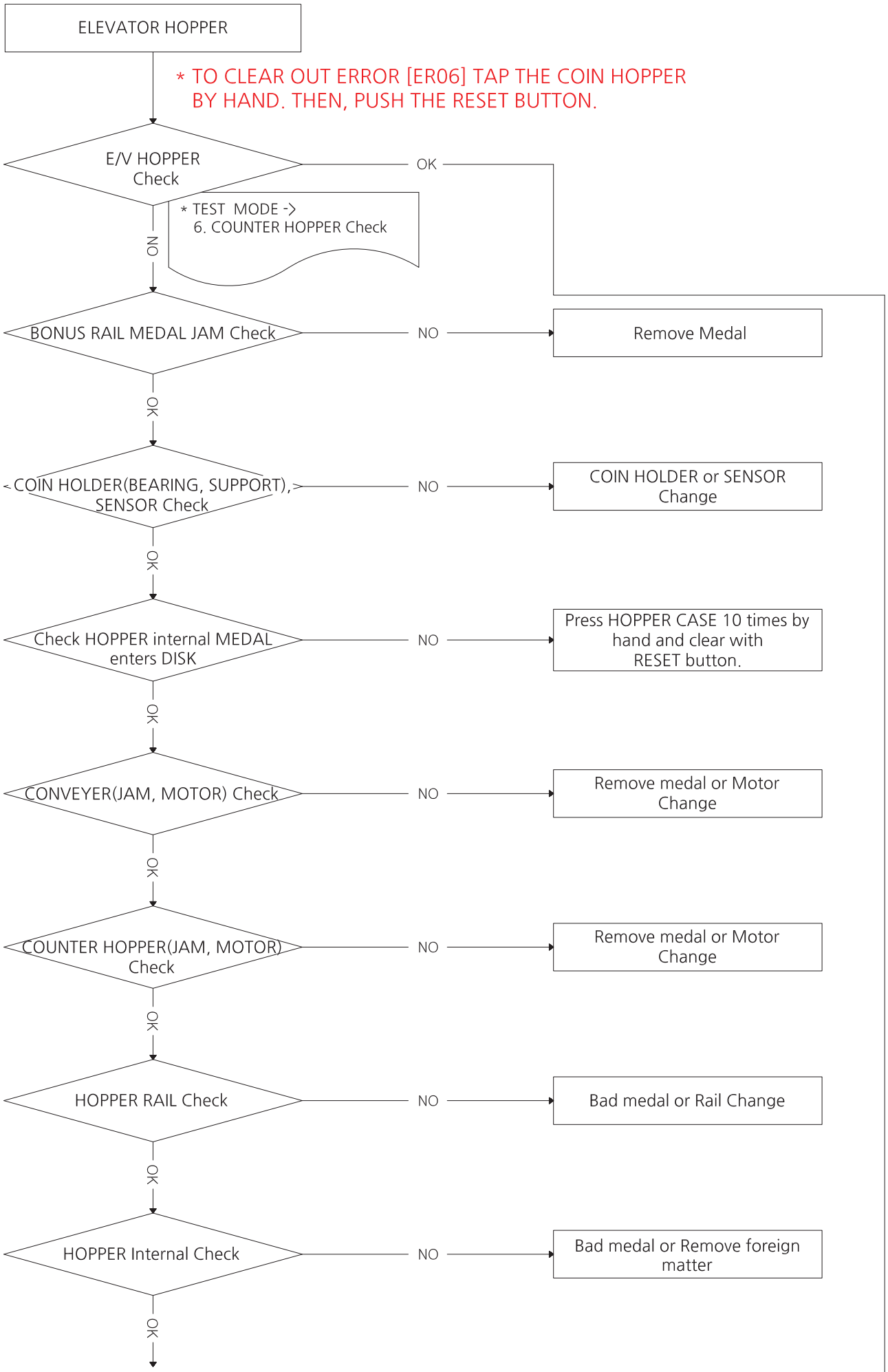
ELEVATOR HOPPER
* TO CLEAR OUT ERROR [ER06] TAP THE COIN HOPPER BY HAND. THEN, PUSH THE RESET BUTTON.
E/V HOPPER Check
OK
* TEST MODE -> 6. COUNTER HOPPER Check
NO
BONUS RAIL MEDAL JAM Check
NO
Remove Medal
OK
COIN HOLDER(BEARING, SUPPORT), SENSOR Check
NO
COIN HOLDER or SENSOR Change
OK
Check HOPPER internal MEDAL enters DISK
NO
Press HOPPER CASE 10 times by hand and clear with RESET button.
OK
CONVEYER(JAM, MOTOR) Check
NO
Remove medal or Motor Change
OK
COUNTER HOPPER(JAM, MOTOR) Check
NO
Remove medal or Motor Change
OK
HOPPER RAIL Check
NO
Bad medal or Rail Change
OK
HOPPER Internal Check
NO
Bad medal or Remove foreign matter
OK

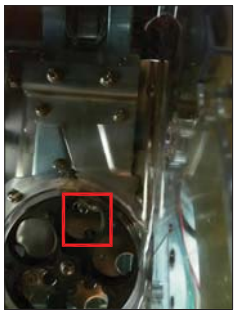

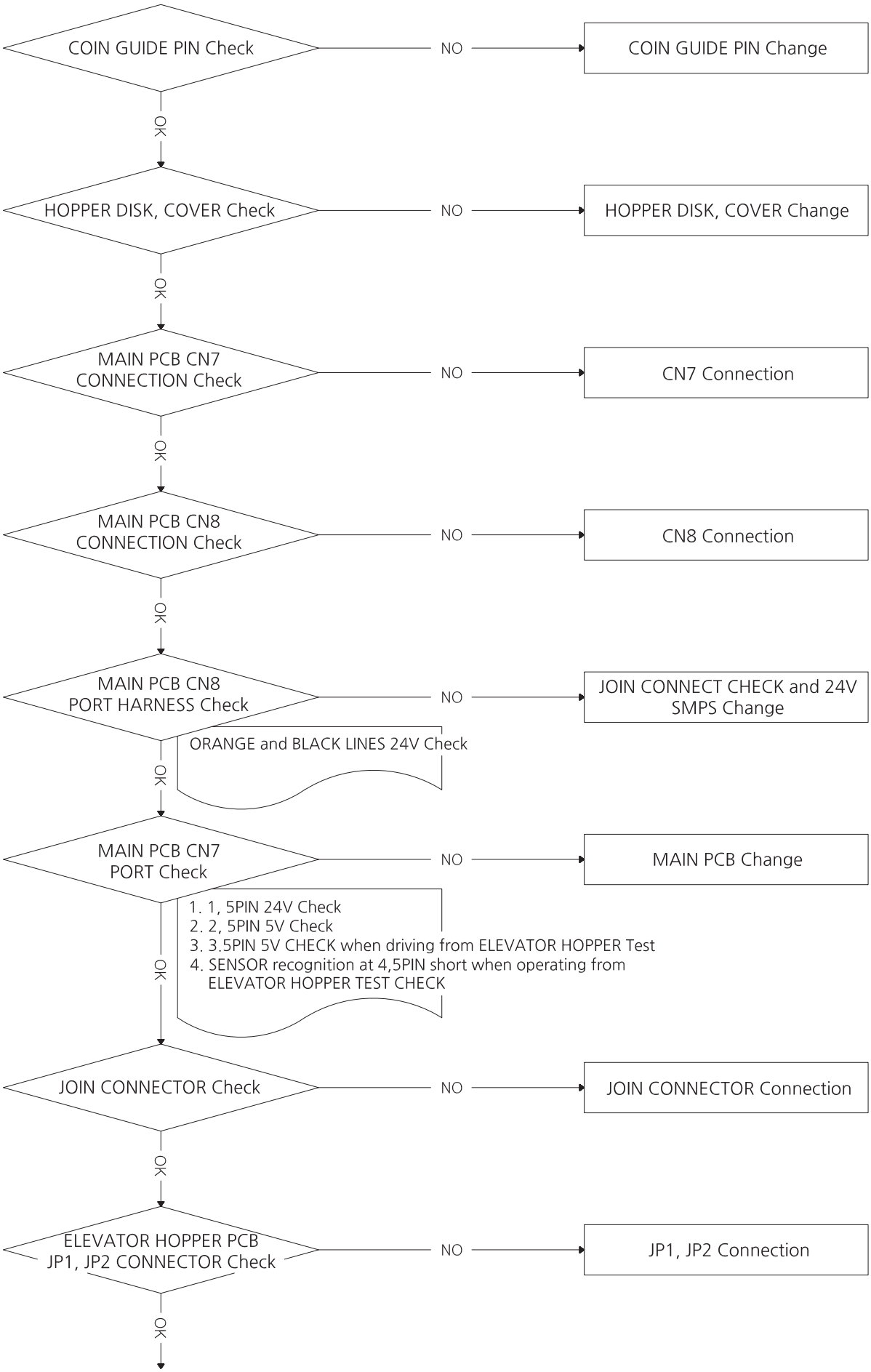
COIN GUIDE PIN Check
NO
COIN GUIDE PIN Change
OK
HOPPER DISK, COVER Check
NO
HOPPER DISK, COVER Change
OK
MAIN PCB CN7 CONNECTION Check
NO
CN7 Connection
OK
MAIN PCB CN8 CONNECTION Check
NO
CN8 Connection
OK
MAIN PCB CN8 PORT HARNESS Check
NO
JOIN CONNECT CHECK and 24V SMPS Change
ORANGE and BLACK LINES 24V Check
OK
MAIN PCB CN7 PORT Check
NO
MAIN PCB Change
1. 1, 5PIN 24V Check
2. 2, 5PIN 5V Check
3. 3.5PIN 5V CHECK when driving from ELEVATOR HOPPER Test
4. SENSOR recognition at 4,5PIN short when operating from ELEVATOR HOPPER TEST CHECK
OK
JOIN CONNECTOR Check
NO
JOIN CONNECTOR Connection
OK
ELEVATOR HOPPER PCB JP1, JP2 CONNECTOR Check
NO
JP1, JP2 Connection
OK

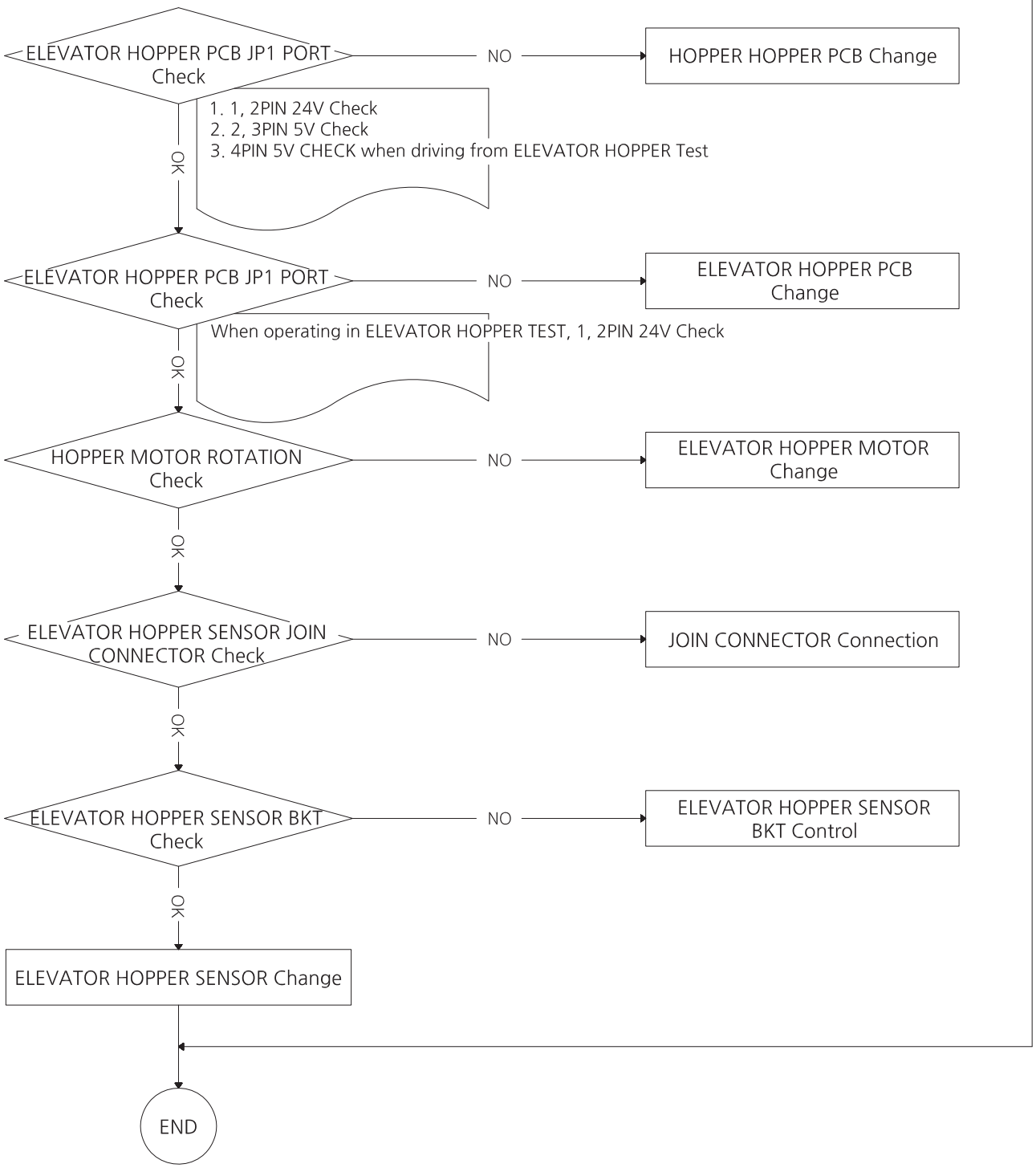
ELEVATOR HOPPER PCB JP1 PORT Check
NO
HOPPER HOPPER PCB Change
1. 1, 2PIN 24V Check
2. 2, 3PIN 5V Check
3. 4PIN 5V CHECK when driving from ELEVATOR HOPPER Test
OK
ELEVATOR HOPPER PCB JP1 PORT Check
NO
ELEVATOR HOPPER PCB Change
When operating in ELEVATOR HOPPER TEST, 1, 2PIN 24V Check
OK
HOPPER MOTOR ROTATION Check
NO
ELEVATOR HOPPER MOTOR Change
OK
ELEVATOR HOPPER SENSOR JOIN CONNECTOR Check
NO
JOIN CONNECTOR Connection
OK
ELEVATOR HOPPER SENSOR BKT Check
NO
ELEVATOR HOPPER SENSOR BKT Control
OK
ELEVATOR HOPPER SENSOR Change
END

# 6-12. CIRCULATION WIPER ERROR [1~4P] - ERROR 07

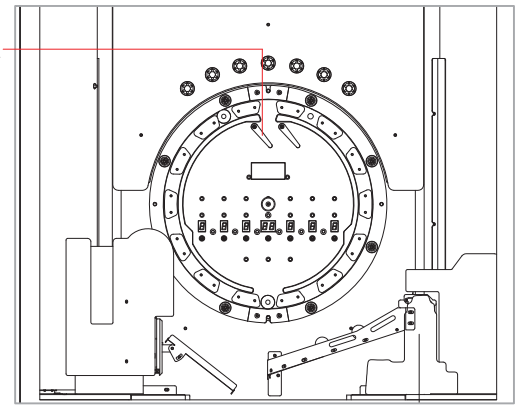


* CAUSE - CIRCULATION WIPER MOTOR

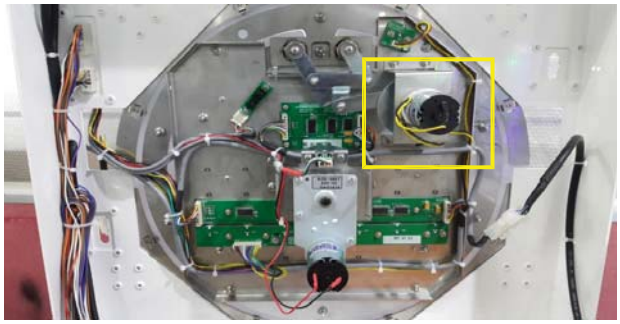

* CAUSE - CIRCULATION WIPER SNEOSR

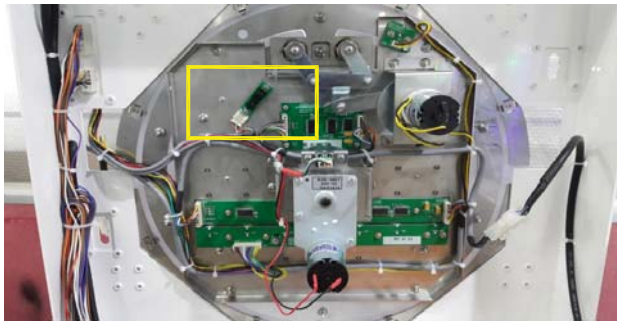

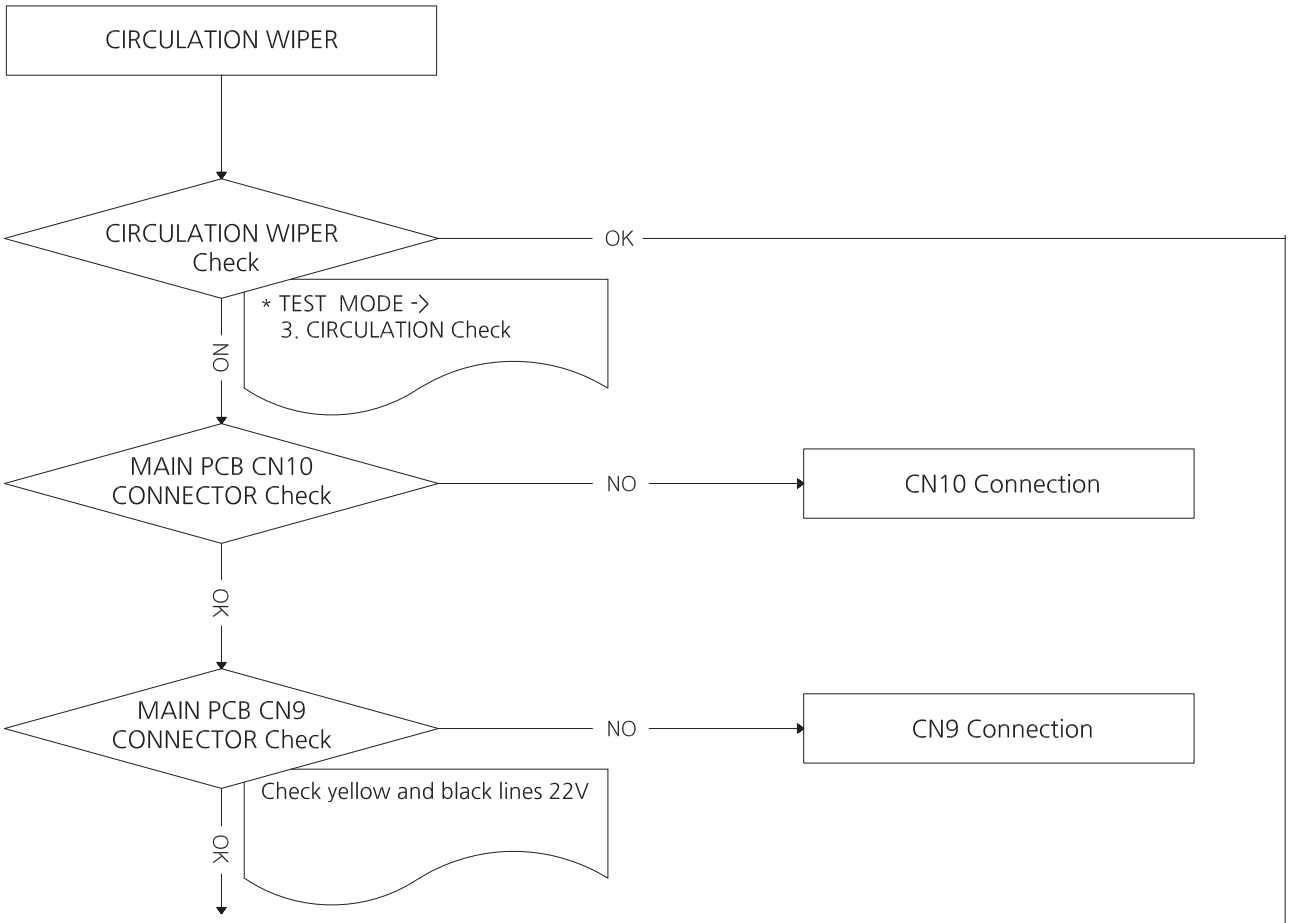

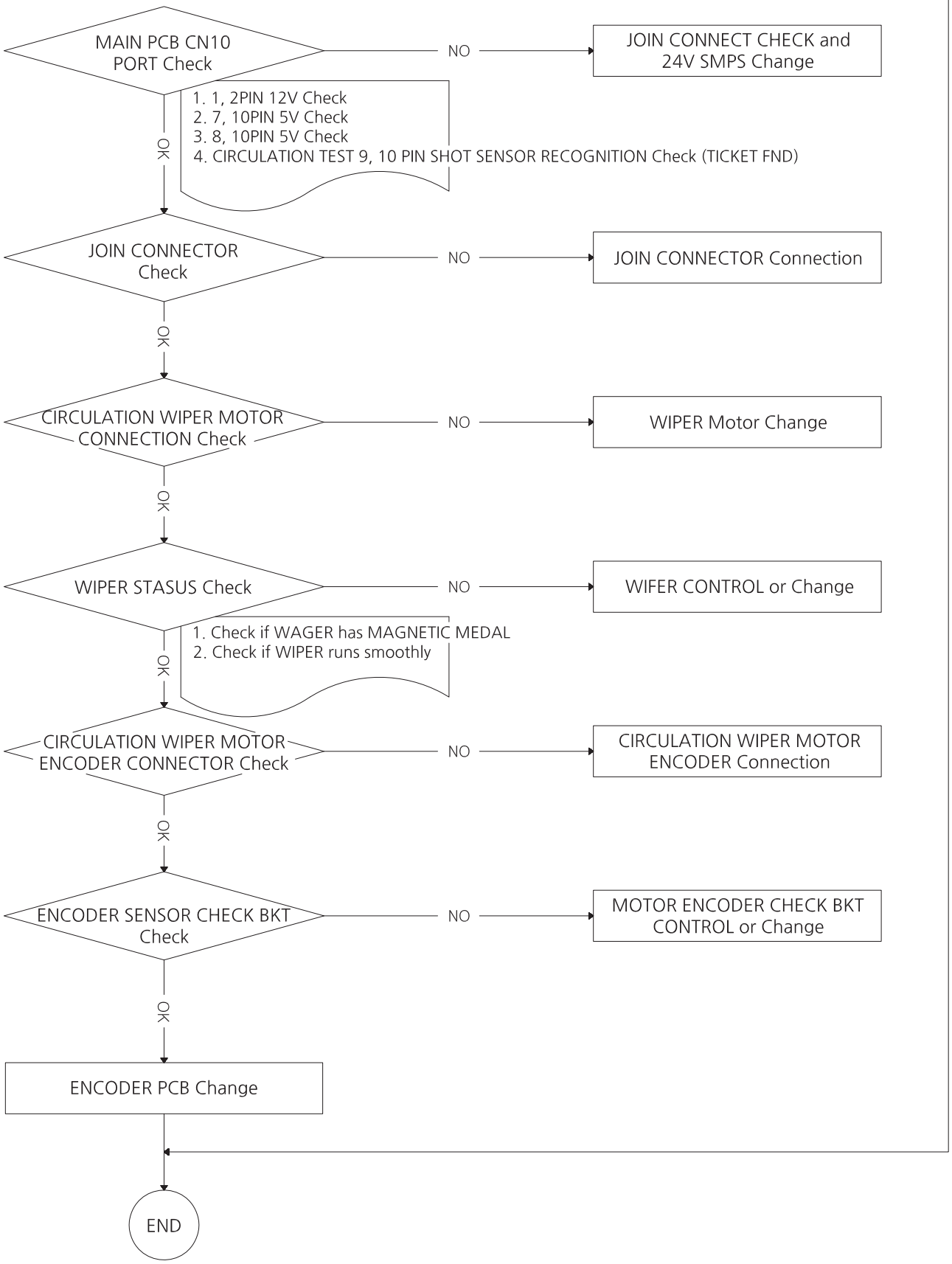
MAIN PCB CN10 PORT Check
NO
JOIN CONNECT CHECK and 24V SMPS Change
1. 1, 2PIN 12V Check
2. 7, 10PIN 5V Check
3. 8, 10PIN 5V Check
4. CIRCULATION TEST 9, 10 PIN SHOT SENSOR RECOGNITION Check (TICKET FND)
OK
JOIN CONNECTOR Check
NO
JOIN CONNECTOR Connection
OK
CIRCULATION WIPER MOTOR CONNECTION Check
NO
WIPER Motor Change
OK
WIPER STASUS Check
NO
WIFER CONTROL or Change
1. Check if WAGER has MAGNETIC MEDAL
2. Check if WIPER runs smoothly
OK
CIRCULATION WIPER MOTOR ENCODER CONNECTOR Check
NO
CIRCULATION WIPER MOTOR ENCODER Connection
OK
ENCODER SENSOR CHECK BKT Check
NO
MOTOR ENCODER CHECK BKT CONTROL or Change
OK
ENCODER PCB Change
END

# 6-13. CIRCULATION ENCODER SENSOR ERROR [1~4P] - ERROR 09

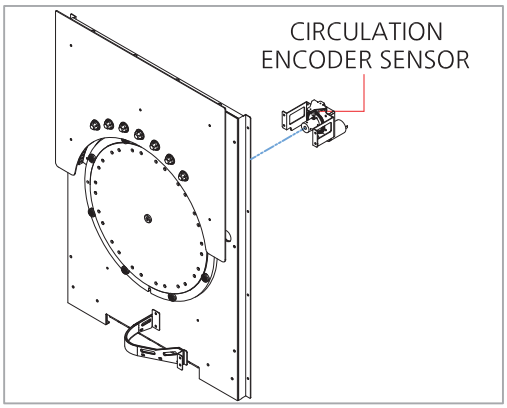


* CAUSE - COIN JAM

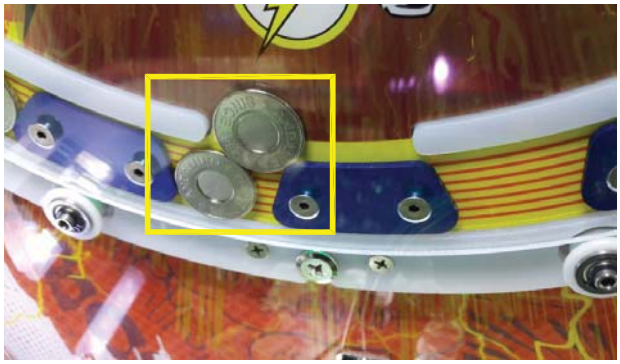

* CAUSE - CIRCULATION MOTOR

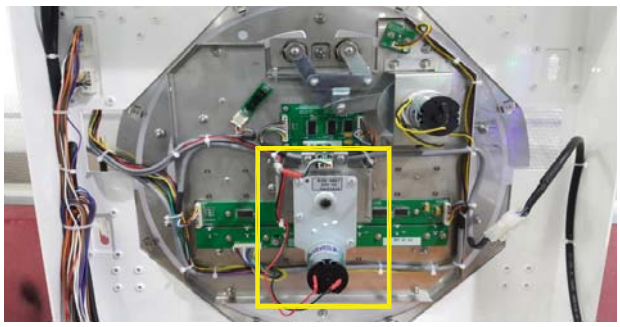

* CAUSE - CIRCULATION SENSOR

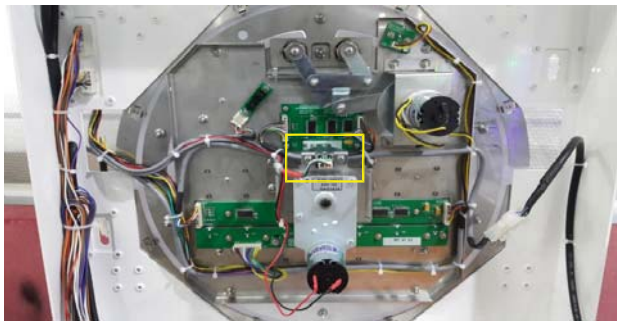

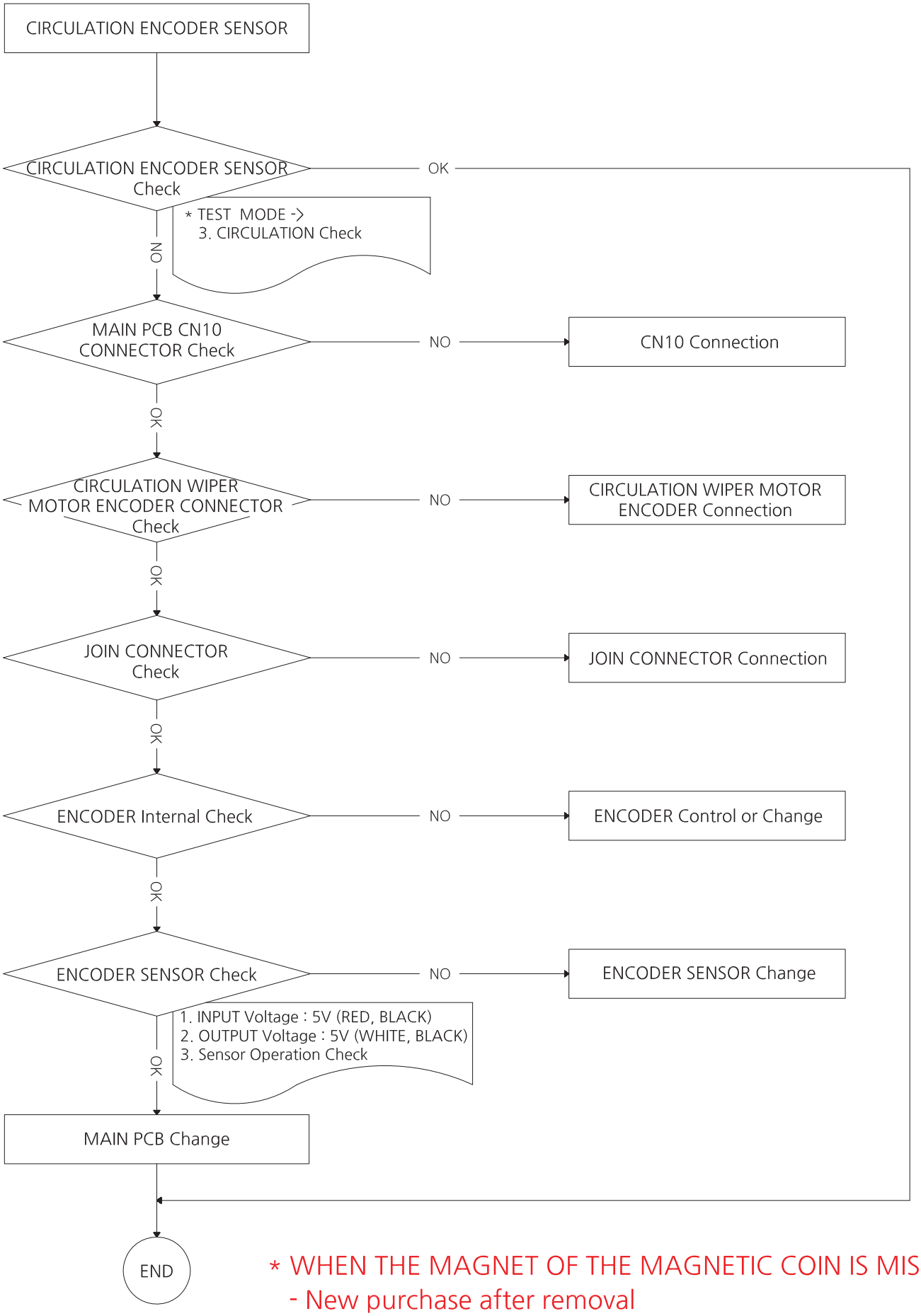


* WHEN THE MAGNET OF THE MAGNETIC COIN IS MISSING
- New purchase after removal

# 6-14. CIRCULATION MAGNETIC SENSOR PCB ERROR [1~4P] - ERROR 10

(MEDAL CIRCULATION CHECK-A PCB ASS'Y)

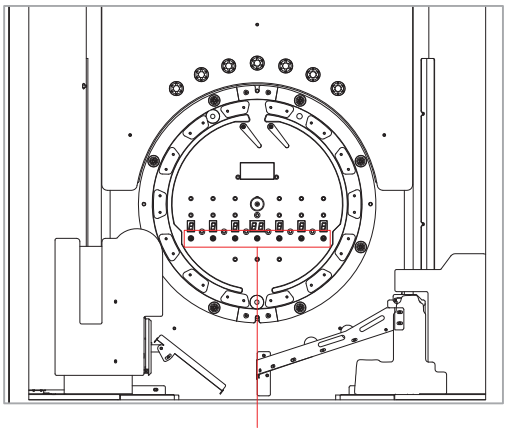

CIRCULATION MEDAL CHECK AREA [A]

* CAUSE - MAGNETIC SENSOR PCB

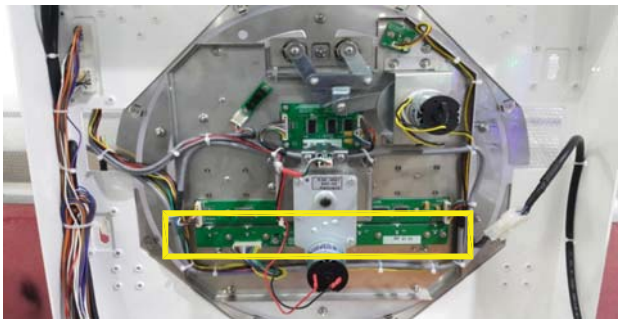

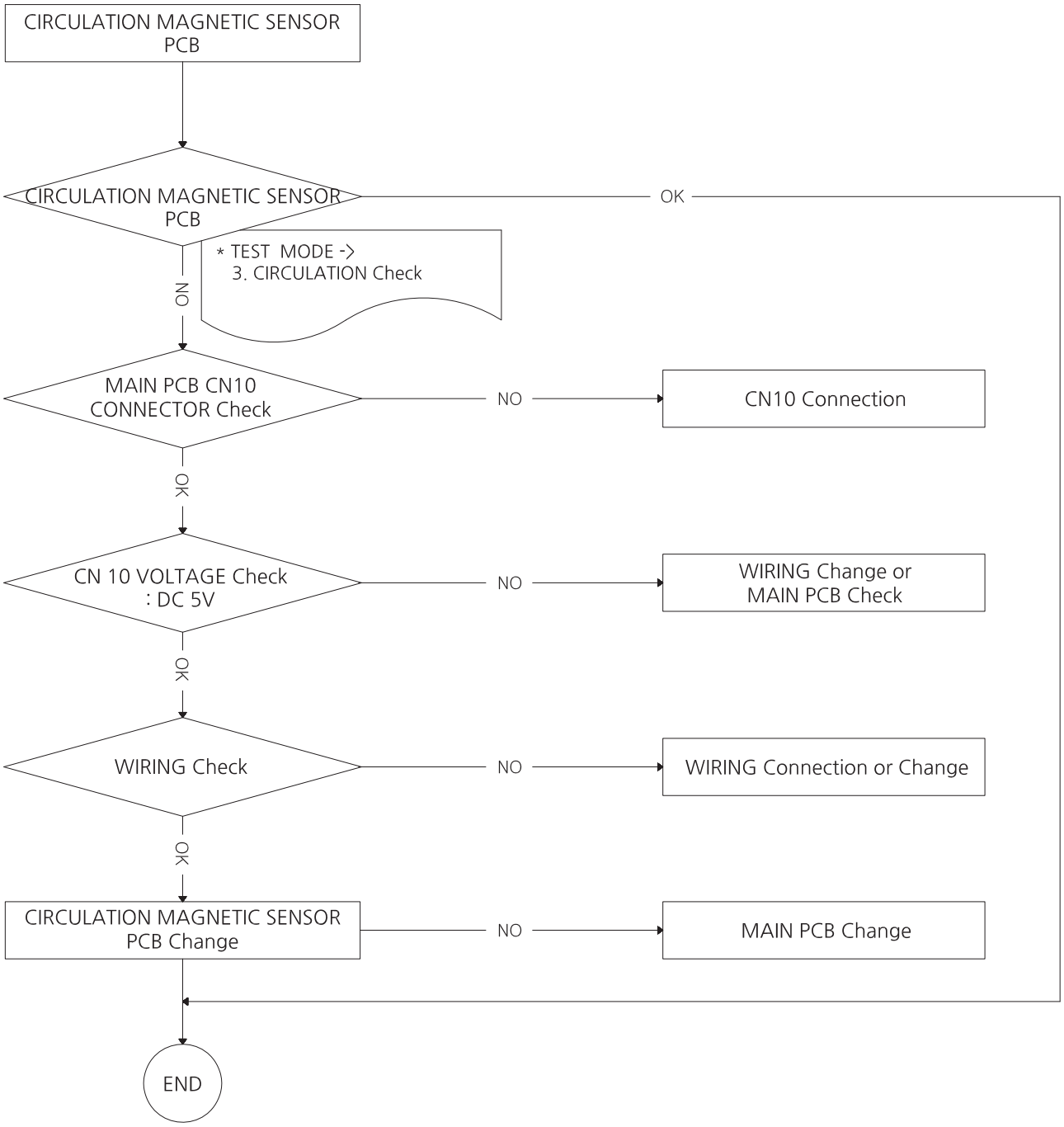

# 6-15. CIRCULATION ERROR [1~4P] - ERROR 03

(MEDAL CIRCULATION CHECK-B PCB ASS'Y)

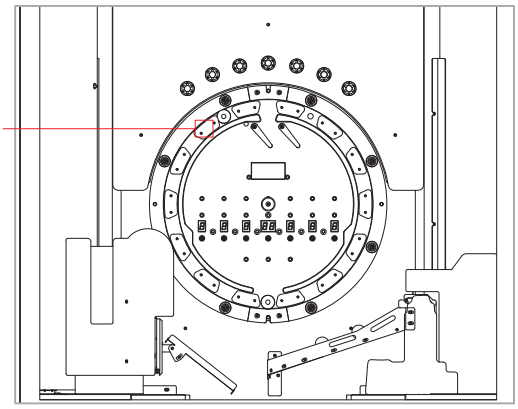


* CAUSE - MEDAL 8ea JAM

- Disable using magnet
- Tap and release
- Move down

* CAUSE - CIRCULATION SENSOR

* IF THE COIN IS PARTIALLY CAUGHT
  - Remove the RING GUIDE by tapping it after removing it

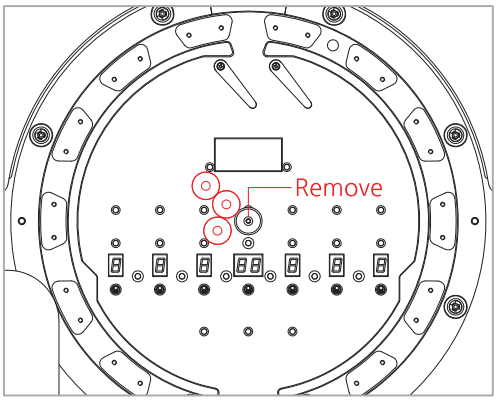

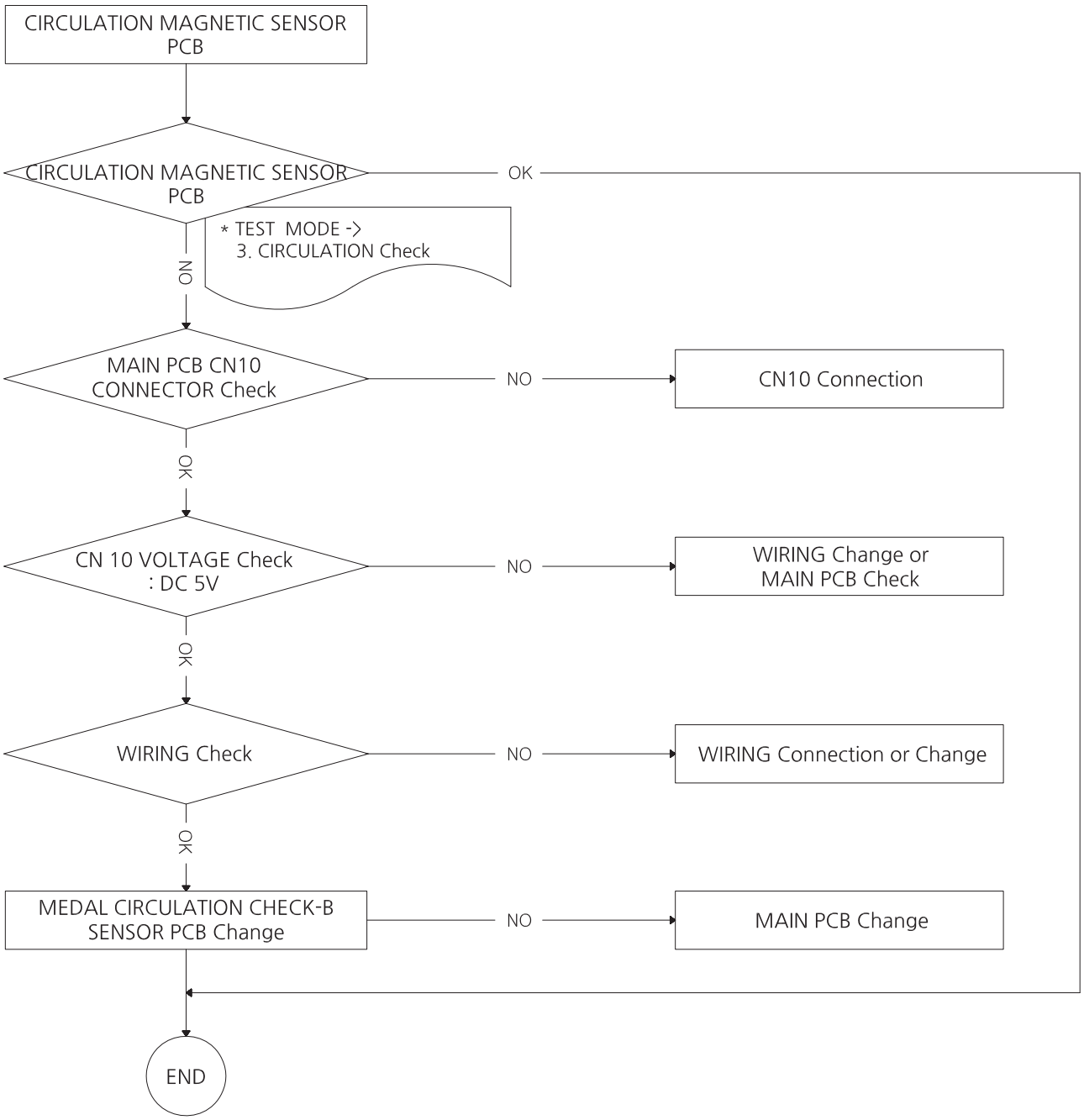
CIRCULATION MAGNETIC SENSOR PCB
CIRCULATION MAGNETIC SENSOR PCB
OK
* TEST MODE ->
3. CIRCULATION Check
NO
MAIN PCB CN10 CONNECTOR Check
NO
CN10 Connection
OK
CN 10 VOLTAGE Check : DC 5V
NO
WIRING Change or MAIN PCB Check
OK
WIRING Check
NO
WIRING Connection or Change
OK
MEDAL CIRCULATION CHECK-B SENSOR PCB Change
NO
MAIN PCB Change
END

# 6-16. CONVEYER ERROR [1~4P] - ERROR 08

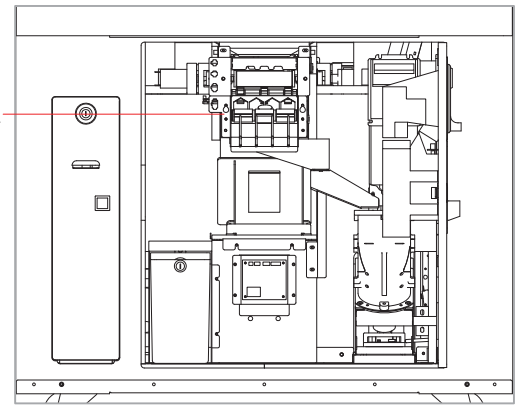


## * CAUSE - COIN JAM

## * CAUSE - CONVEYER MOTOR

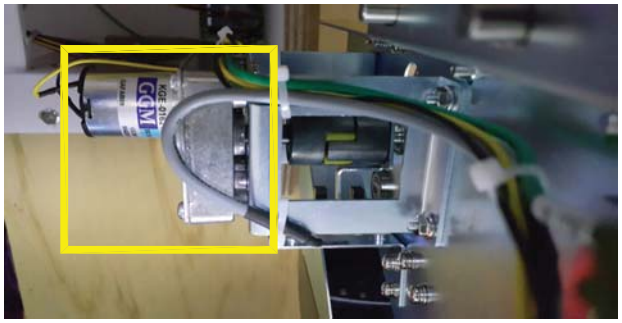

## * CAUSE - CONVEYER BELT

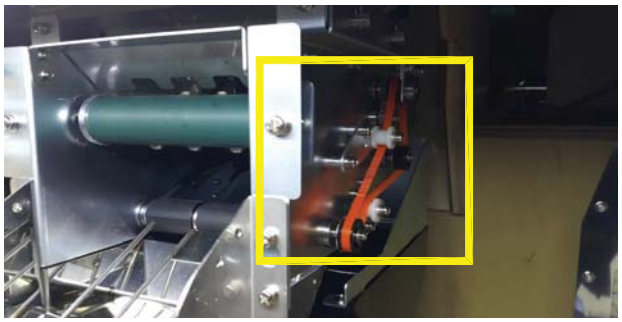

## * CAUSE - CONVEYER SENSOR

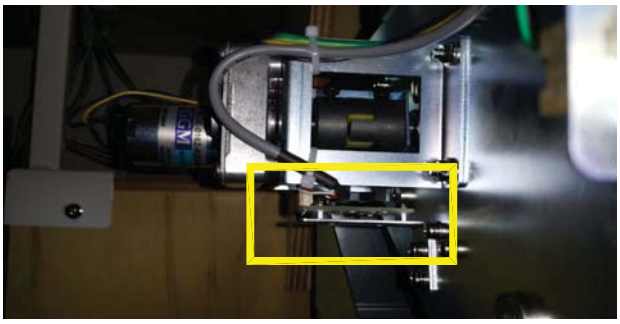

## * HOW TO DISASSEMBLE CONVEYOR

1. Removing screw 2EA
2. Separation of wiring 3EA
3. Pull out the conveyor from the side 4EA shaft
4. Assemble hinge to top of PAYOUT PANEL when reassembling.
   - Reassemble them in reverse order

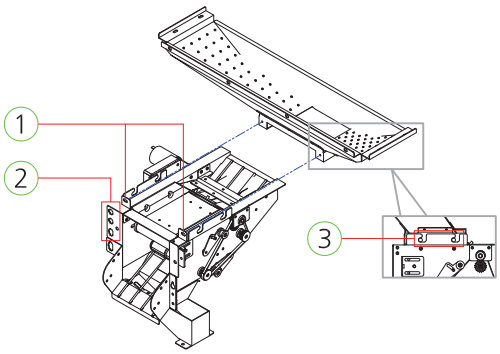


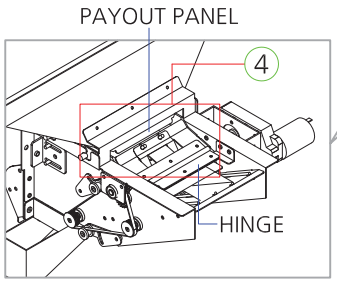


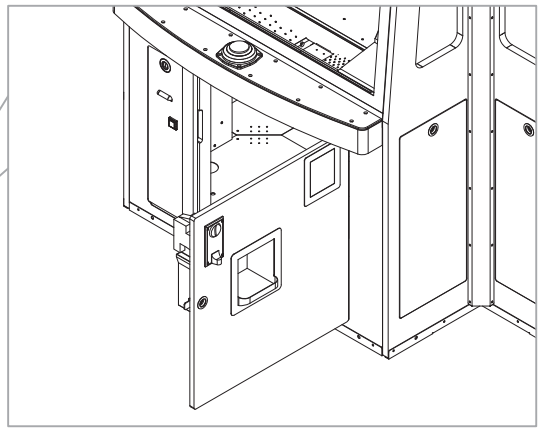

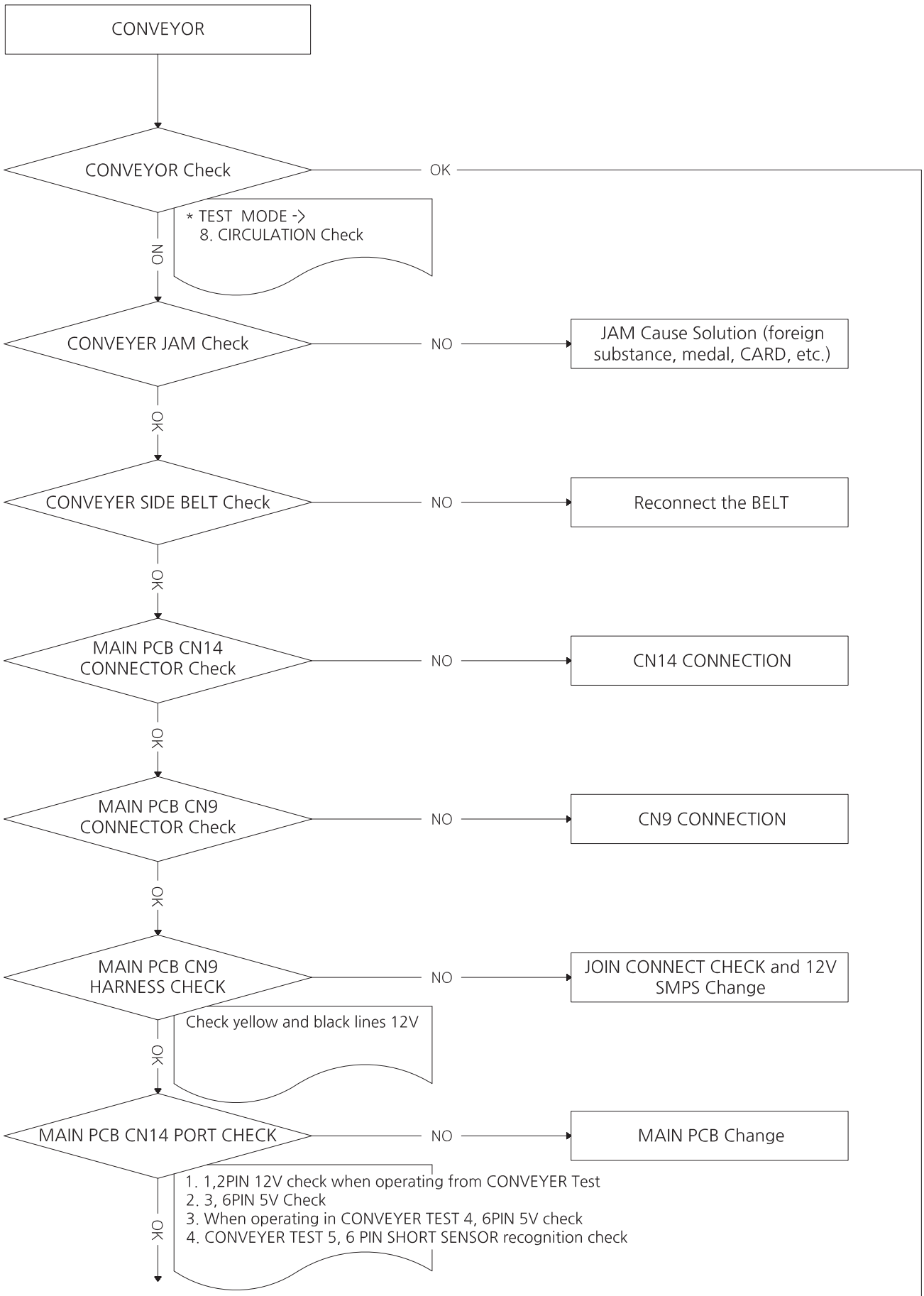
CONVEYOR
CONVEYOR Check
OK
* TEST MODE ->
8. CIRCULATION Check
NO
CONVEYER JAM Check
NO
JAM Cause Solution (foreign substance, medal, CARD, etc.)
OK
CONVEYER SIDE BELT Check
NO
Reconnect the BELT
OK
MAIN PCB CN14 CONNECTOR Check
NO
CN14 CONNECTION
OK
MAIN PCB CN9 CONNECTOR Check
NO
CN9 CONNECTION
OK
MAIN PCB CN9 HARNESS CHECK
NO
JOIN CONNECT CHECK and 12V SMPS Change
Check yellow and black lines 12V
OK
MAIN PCB CN14 PORT CHECK
NO
MAIN PCB Change
1. 1,2PIN 12V check when operating from CONVEYER Test
2. 3, 6PIN 5V Check
3. When operating in CONVEYER TEST 4, 6PIN 5V check
4. CONVEYER TEST 5, 6 PIN SHORT SENSOR recognition check
OK

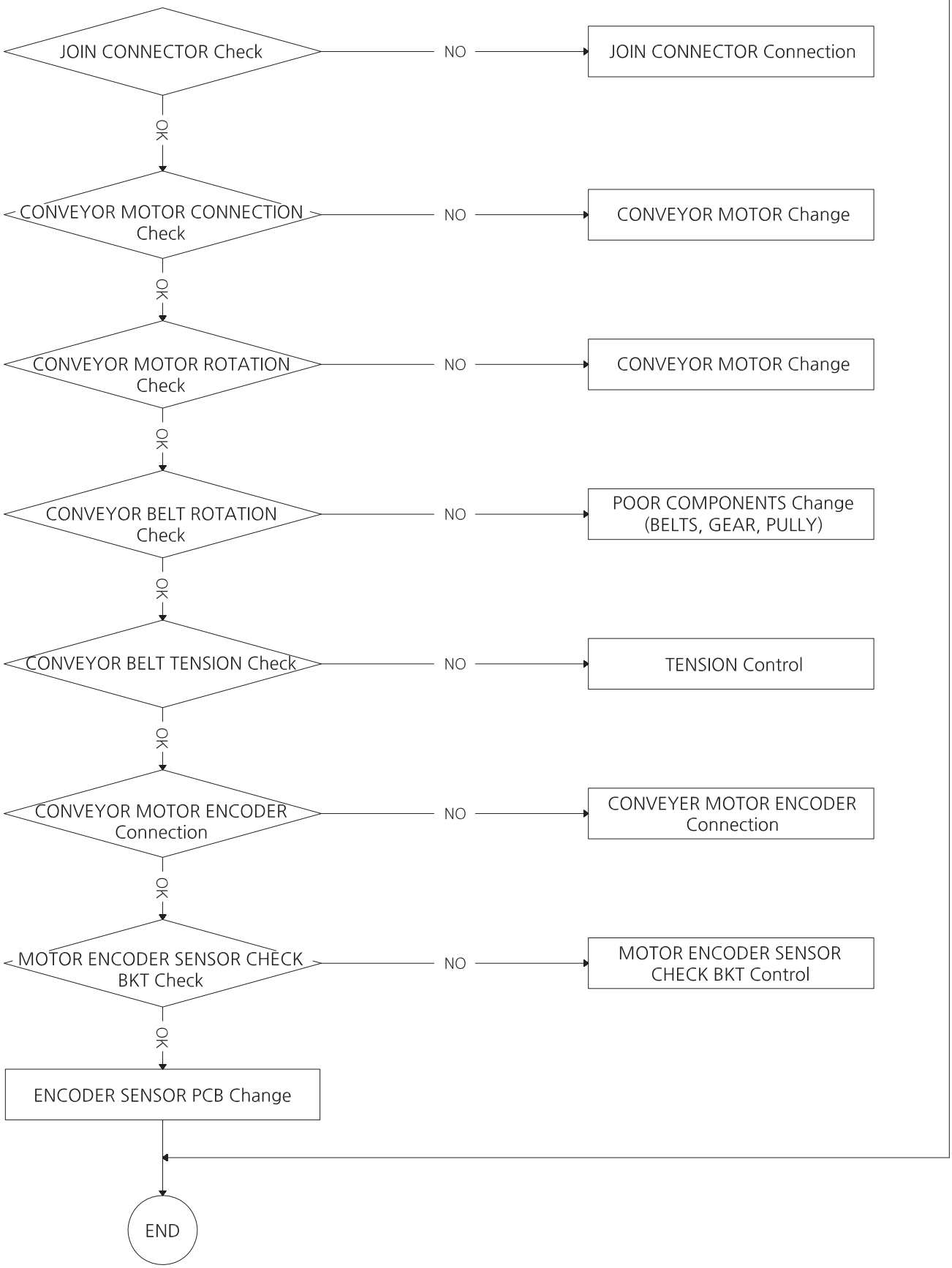
JOIN CONNECTOR Check
NO
JOIN CONNECTOR Connection
OK
CONVEYOR MOTOR CONNECTION Check
NO
CONVEYOR MOTOR Change
OK
CONVEYOR MOTOR ROTATION Check
NO
CONVEYOR MOTOR Change
OK
CONVEYOR BELT ROTATION Check
NO
POOR COMPONENTS Change (BELTS, GEAR, PULLY)
OK
CONVEYOR BELT TENSION Check
NO
TENSION Control
OK
CONVEYOR MOTOR ENCODER Connection
NO
CONVEYER MOTOR ENCODER Connection
OK
MOTOR ENCODER SENSOR CHECK BKT Check
NO
MOTOR ENCODER SENSOR CHECK BKT Control
OK
ENCODER SENSOR PCB Change
END

# 6-17. CARD DISPENSER ERROR [1~4P] - ERROR 11

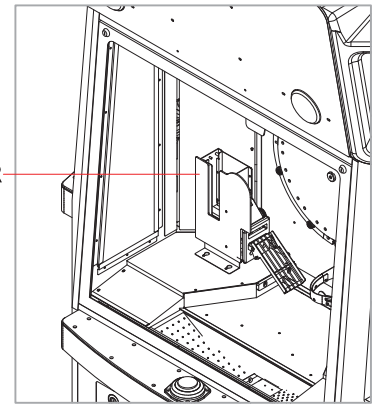


* CAUSE - CARD JAM or EMPTY

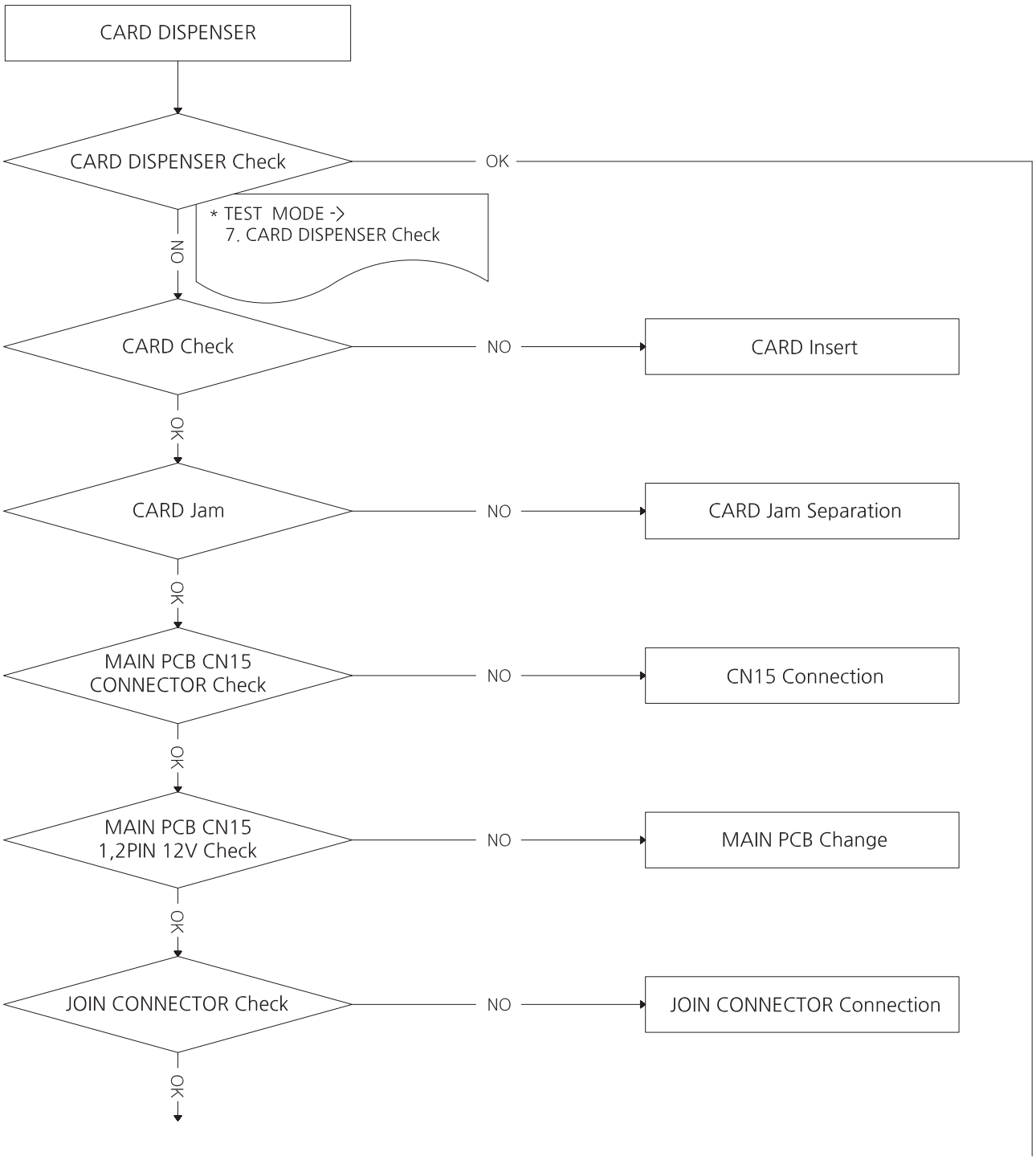

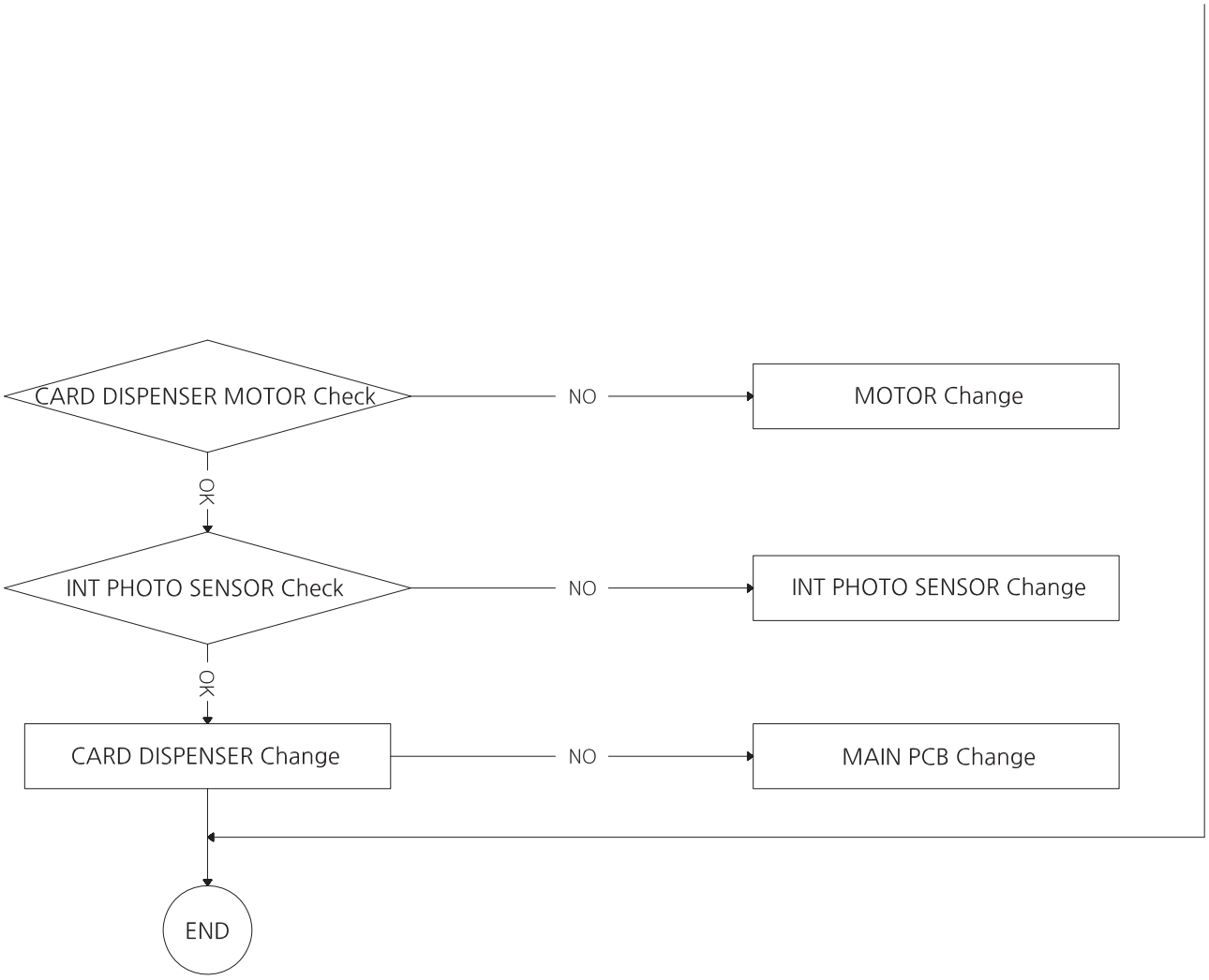
CARD DISPENSER MOTOR Check
NO
MOTOR Change
OK
INT PHOTO SENSOR Check
NO
INT PHOTO SENSOR Change
OK
CARD DISPENSER Change
NO
MAIN PCB Change
END

*Common: Check the input voltage, check wiring

# 6-18. SOUND ERROR [1~4P]

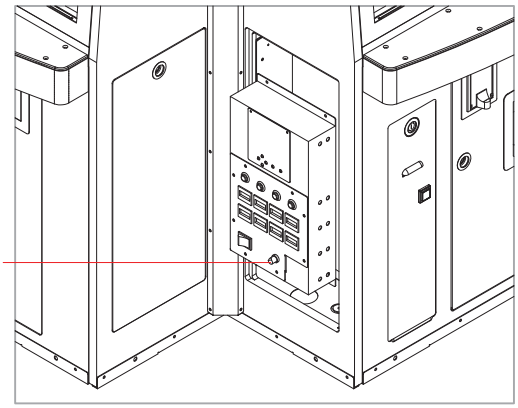


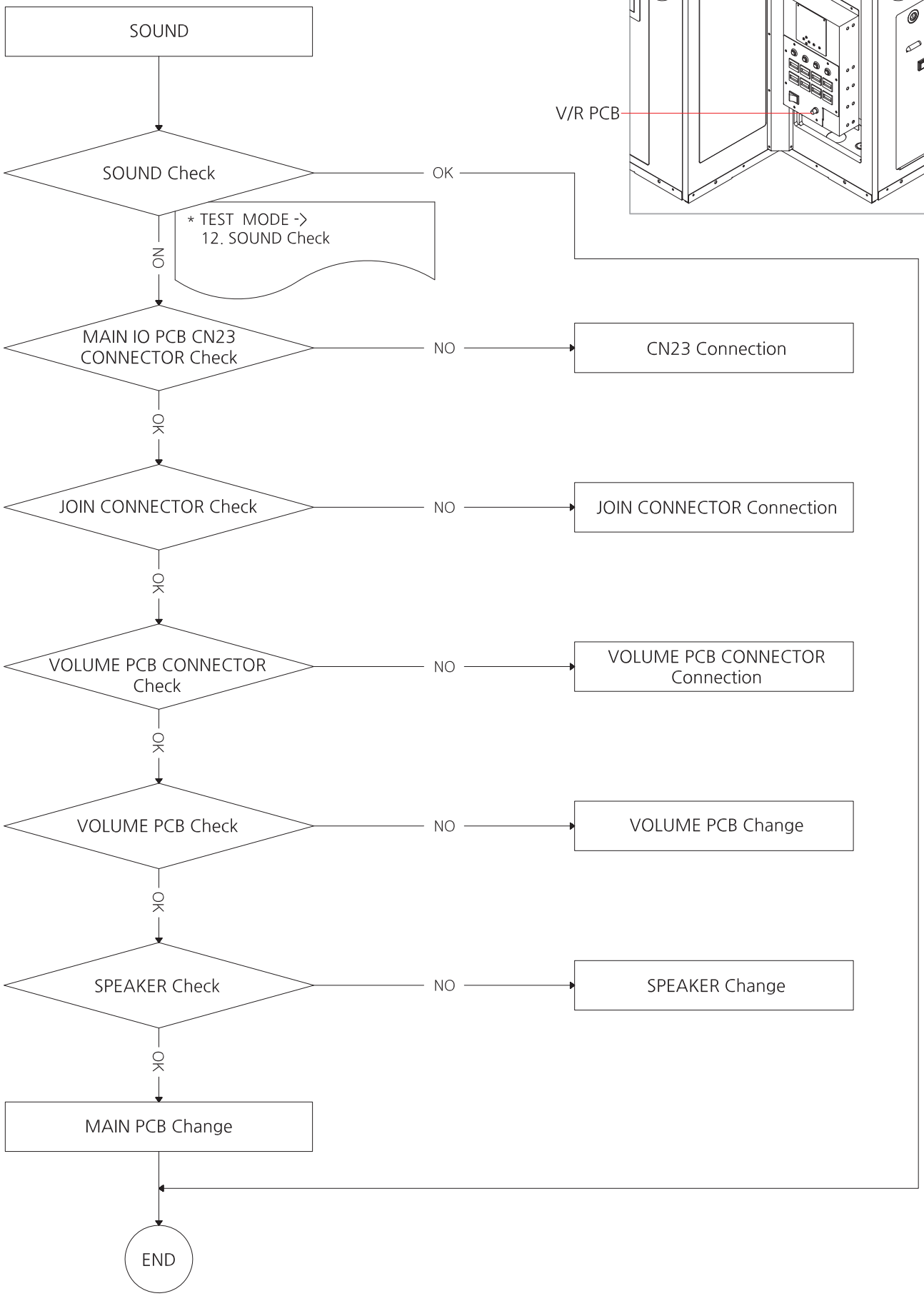

*Common: Check the input voltage, check wiring

# 6-19. COIN SELECTOR ERROR [1~4P] - ERROR 02

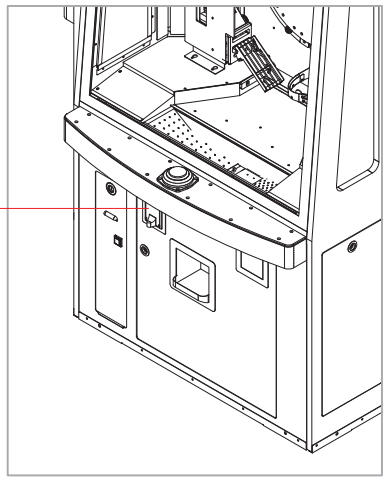


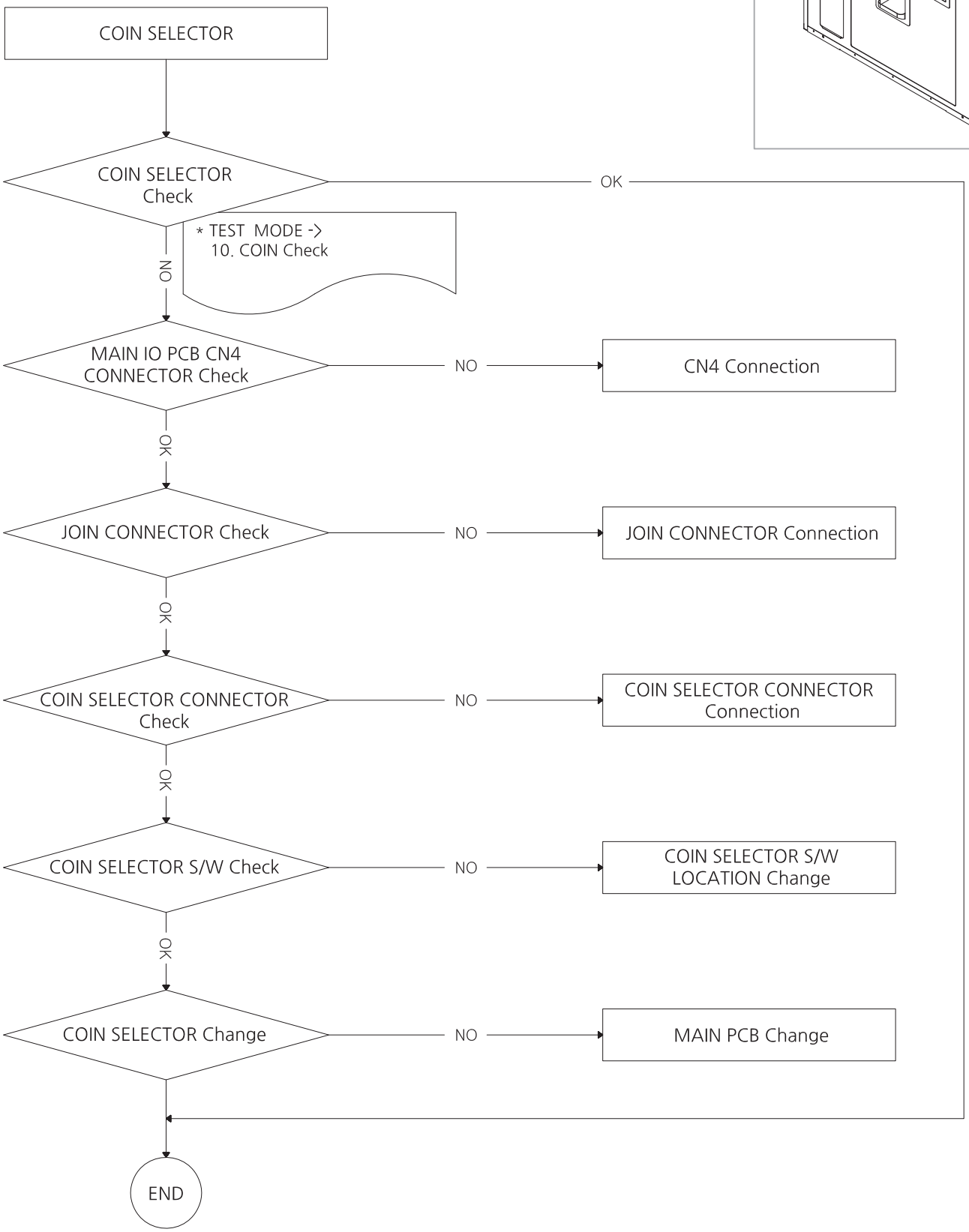

*Common: Check the input voltage, check wiring

# 6-20. SETUP BUTTON ERROR

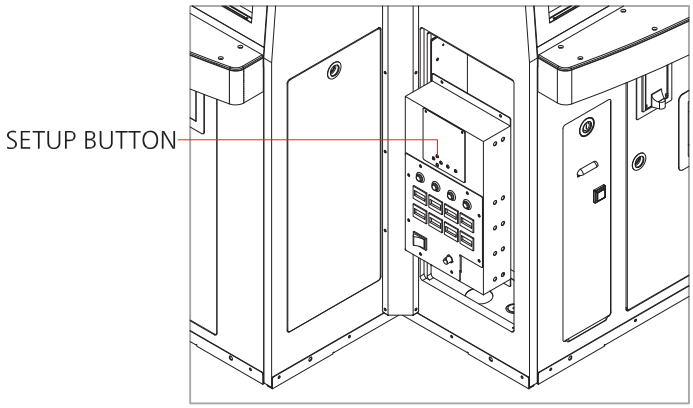


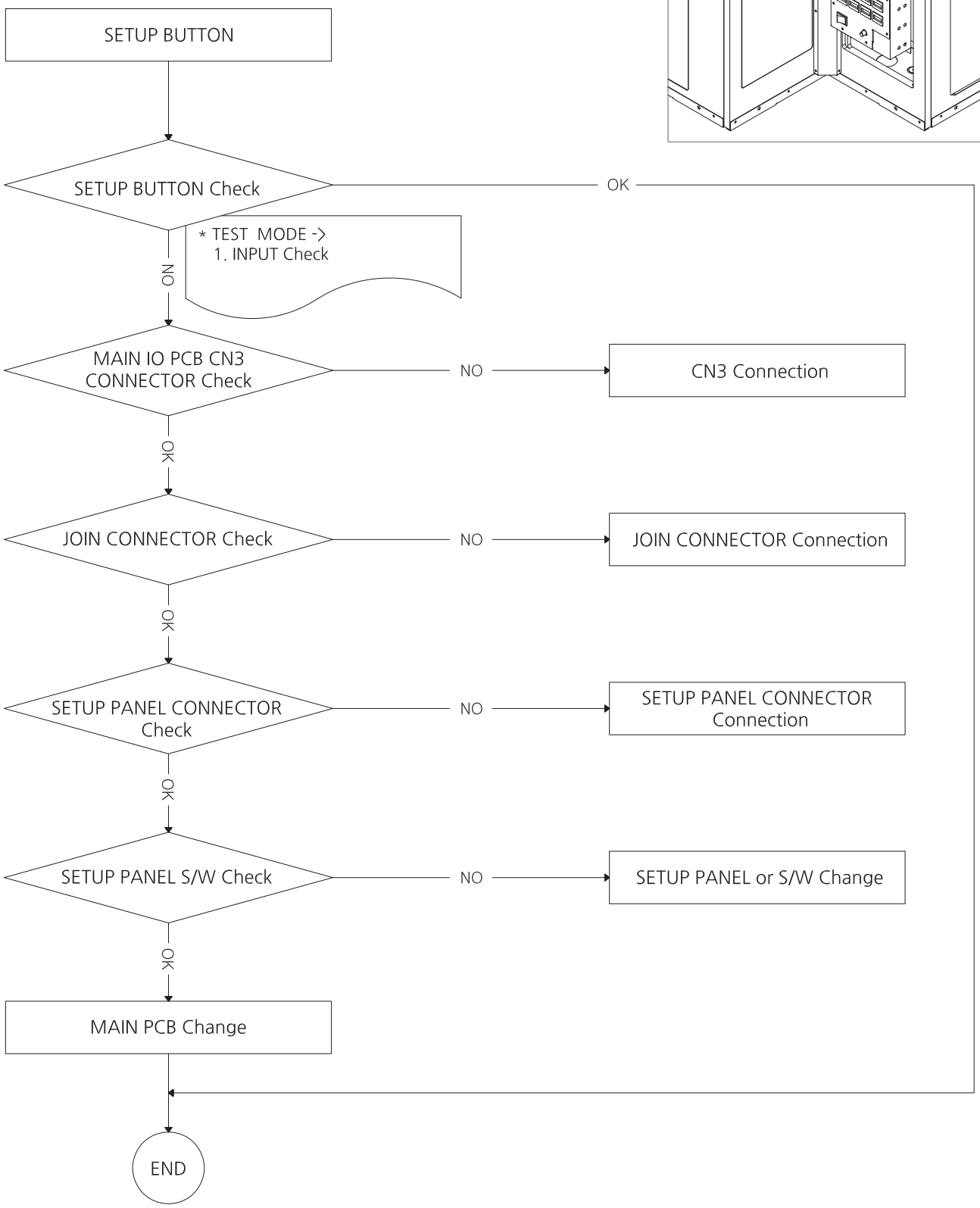

# 6-21. COUNTER ERROR [1~4P]

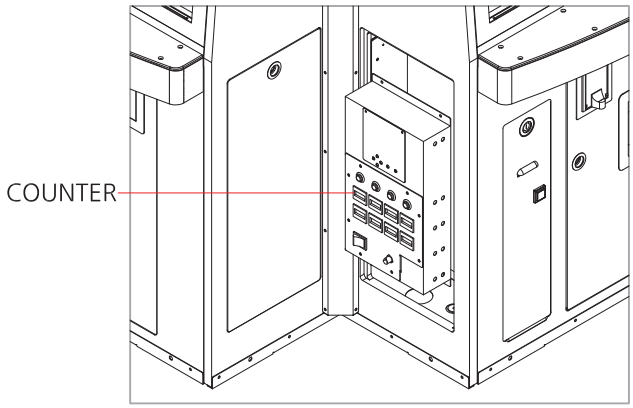


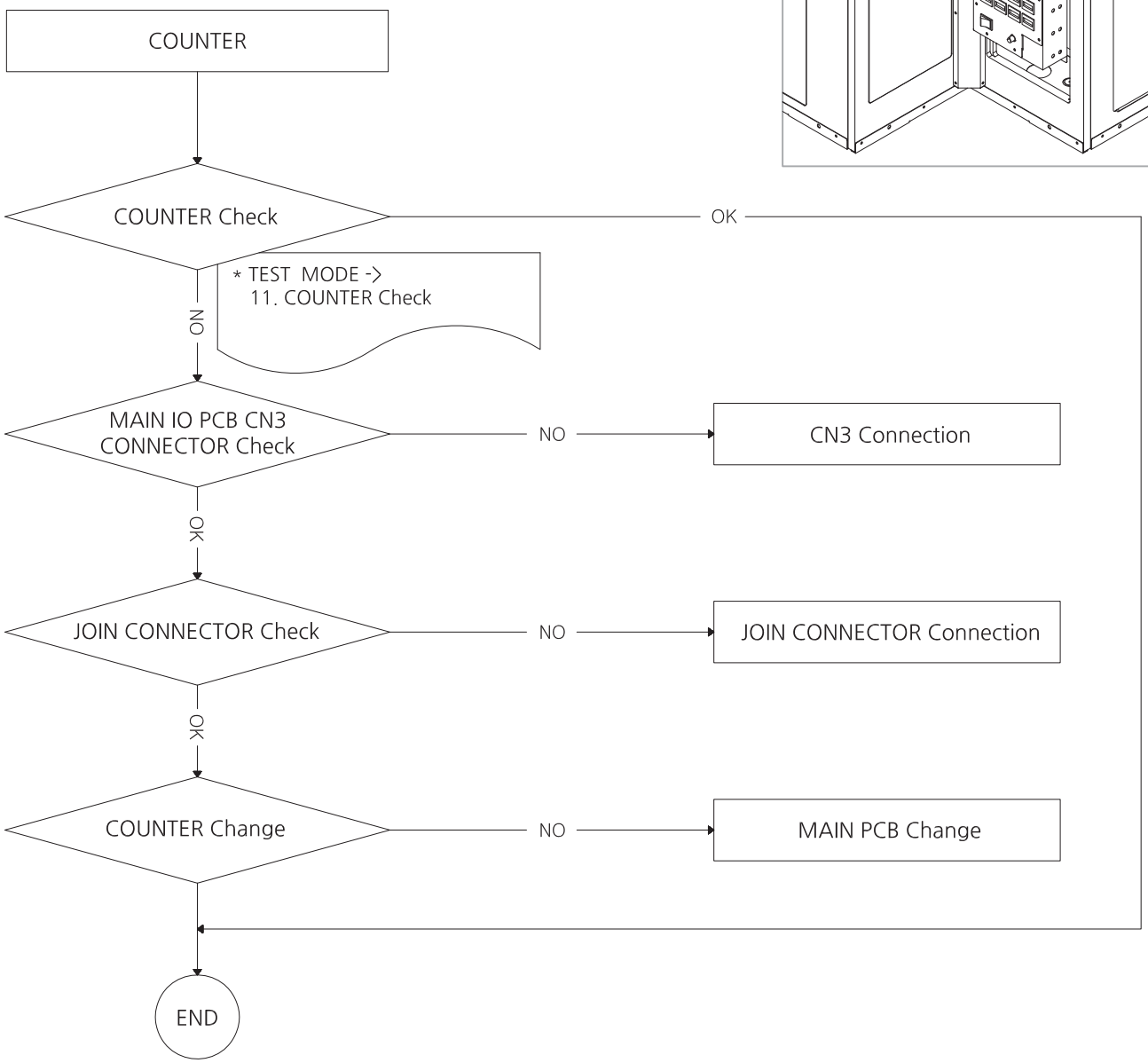

# 6-22. COMMUNICATION ERROR [1~4P] - ERROR 21

## * CAUSE - COMMUNUCATION ERROR WITH MAIN PCB

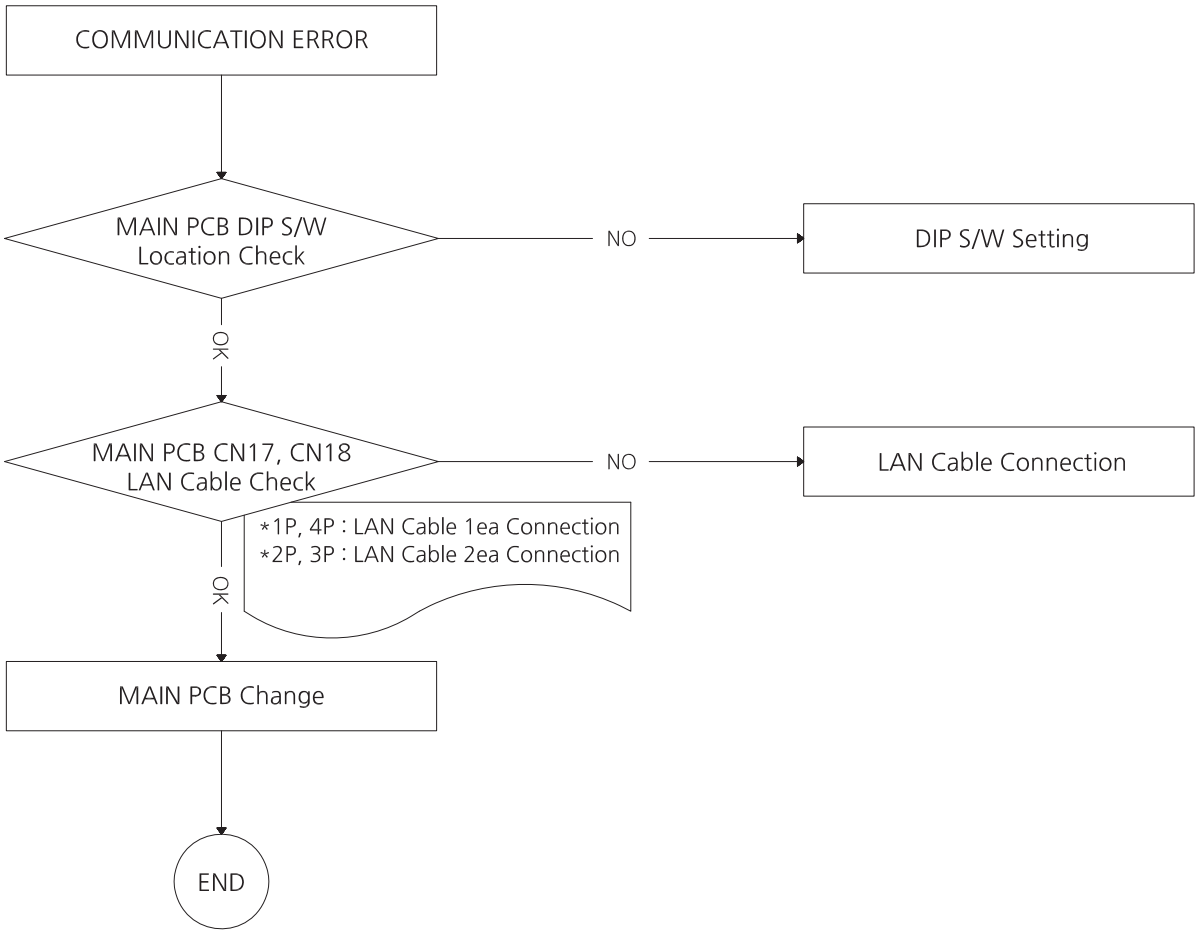

# 7. EXPLODED VIEW

## 7-1. MAIN CABINET PART

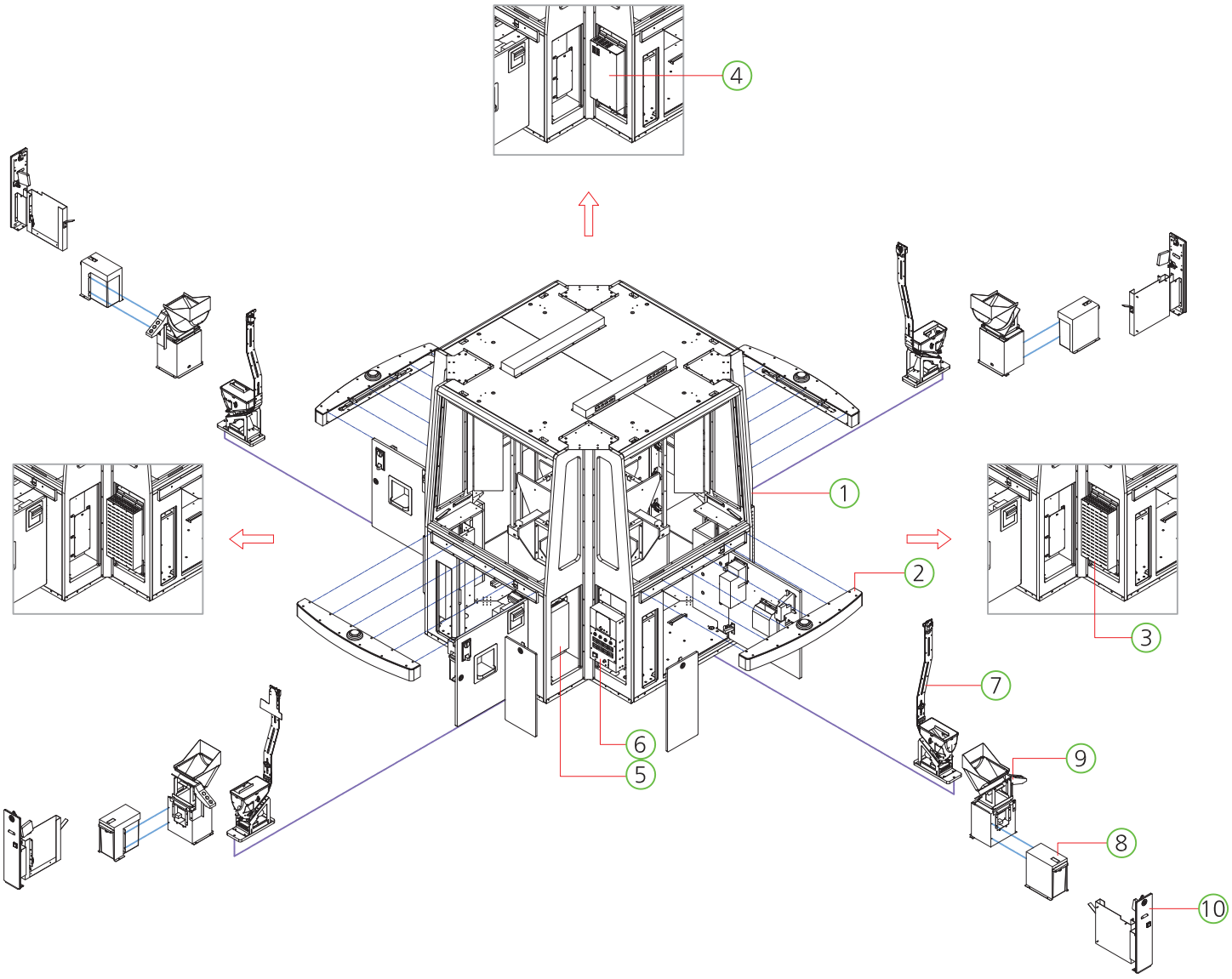


| NO. | PART NAME | SPEC. | QUANTITY | CODE NO. |
|---|---|---|---|---|
| 1 | MAIN CABINET | - | 1 | - |
| 2 | FRONT TABLE PART | - | 4 | - |
| 3 | SMPS POWER PART 01 | - | 4 | - |
| 4 | SMPS POWER PART 02 | - | 4 | - |
| 5 | MAIN IO PART | - | 4 | - |
| 6 | SETUP PANEL PART | - | 4 | - |
| 7 | ELEVATOR HOPPER PART | - | 4 | - |
| 8 | COIN BOX PART | - | 4 | - |
| 9 | COUNTER HOPPER PART | - | 4 | - |
| 10 | TICKET DISPENSER PART | - | 4 | - |

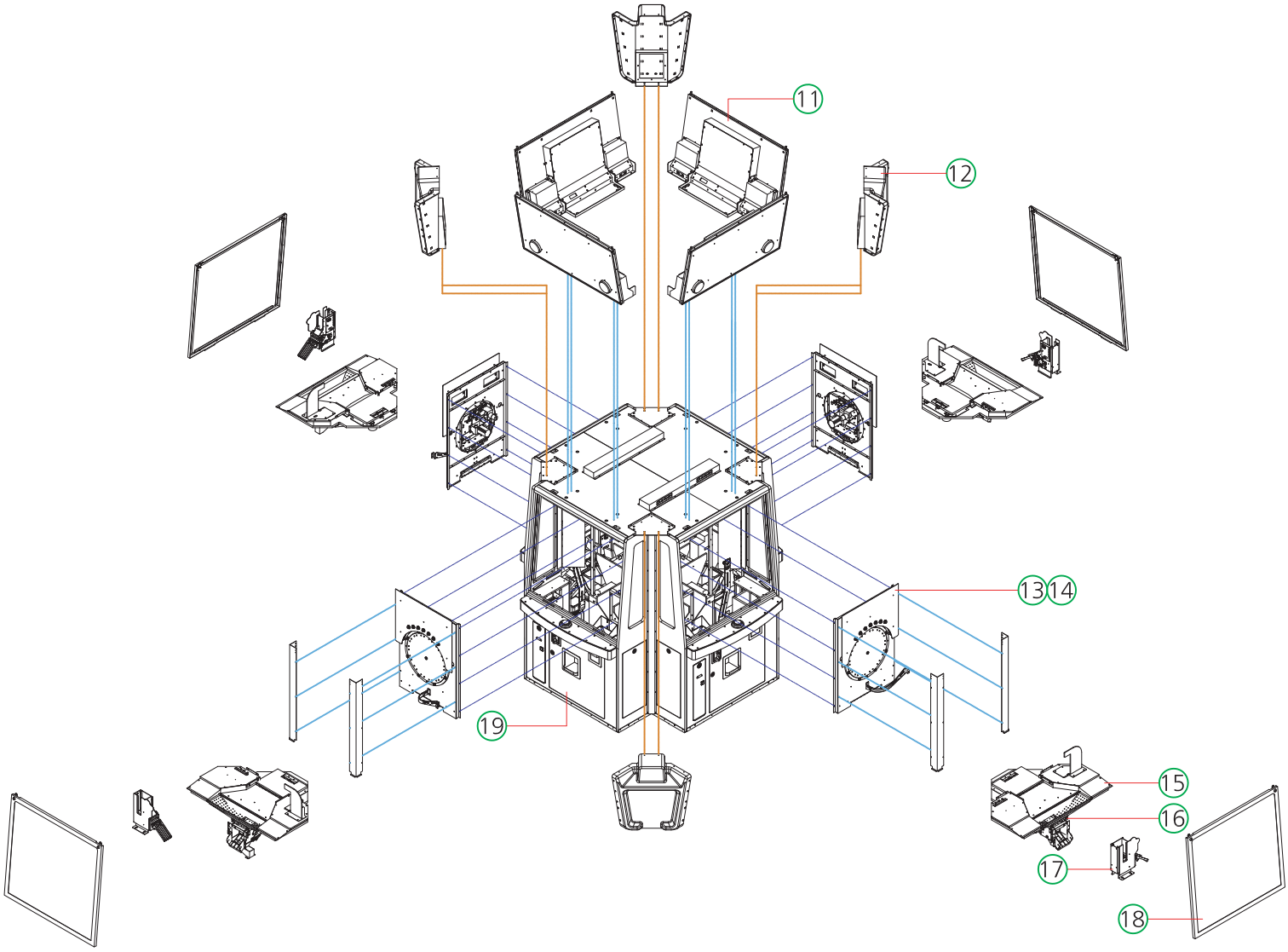


| NO. | PART NAME | SPEC. | QUANTITY | CODE NO. |
|---|---|---|---|---|
| 11 | BILLBOARD PART | - | 4 | - |
| 12 | BILLBOARD CORNER DECO PART | - | 4 | - |
| 13 | SCORE BOARD PANEL PART 01 | - | 4 | - |
| 14 | SCORE BOARD PANEL PART 02 | - | 4 | - |
| 15 | PUSHER PANEL PART | - | 4 | - |
| 16 | FRONT ROLLER PART | - | 4 | - |
| 17 | CARD DISPENSER PART | - | 4 | - |
| 18 | GLASS DOOR PART | - | 4 | - |
| 19 | FRONT DOOR PART | - | 4 | - |

## 7-2. FRONT TABLE PART

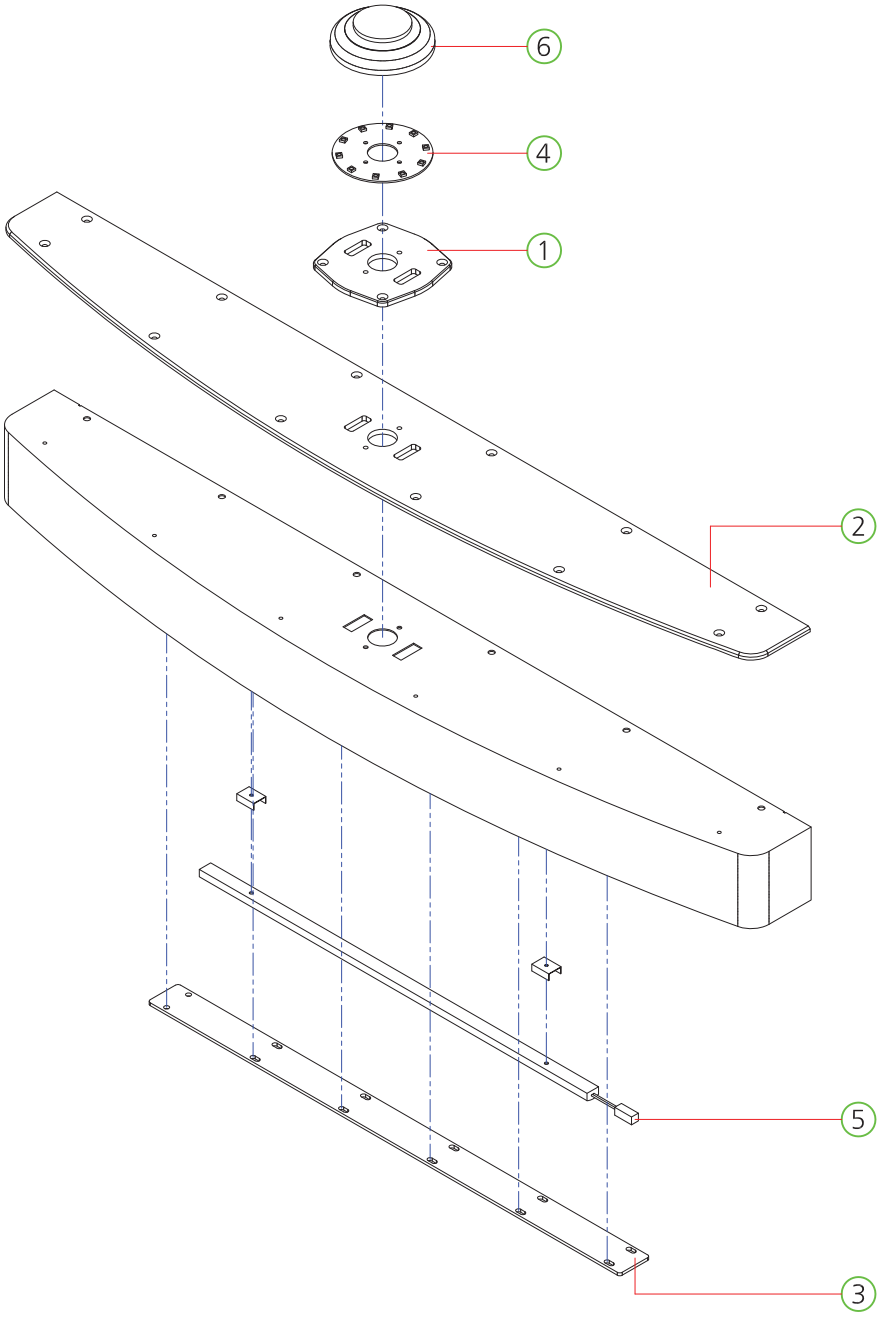


| NO. | PART NAME | SPEC. | QUANTITY | CODE NO. |
|---|---|---|---|---|
| 1 | FRONT TABLE BUTTON ACRYL | ACRYL-5.0t | 1 | MDCC0ACR032 |
| 2 | FRONT TABLE ACRYL | ACRYL-5.0t | 1 | - |
| 3 | FRONT TABLE LED BAR COVER | ACRYL-3.0t | 1 | MDCC0ACR009 |
| 4 | BUTTON LED PCB ASS'Y | - | 1 | ASHS0PCB002 |
| 5 | 12_LED BAR PCB ASS'Y | 460mm | 1 | AZZZ0PCB124 |
| 6 | BUTTON ASS'Y | - | 1 | MZZZ0BUT101 |

## 7-3. SMPS POWER PART 01

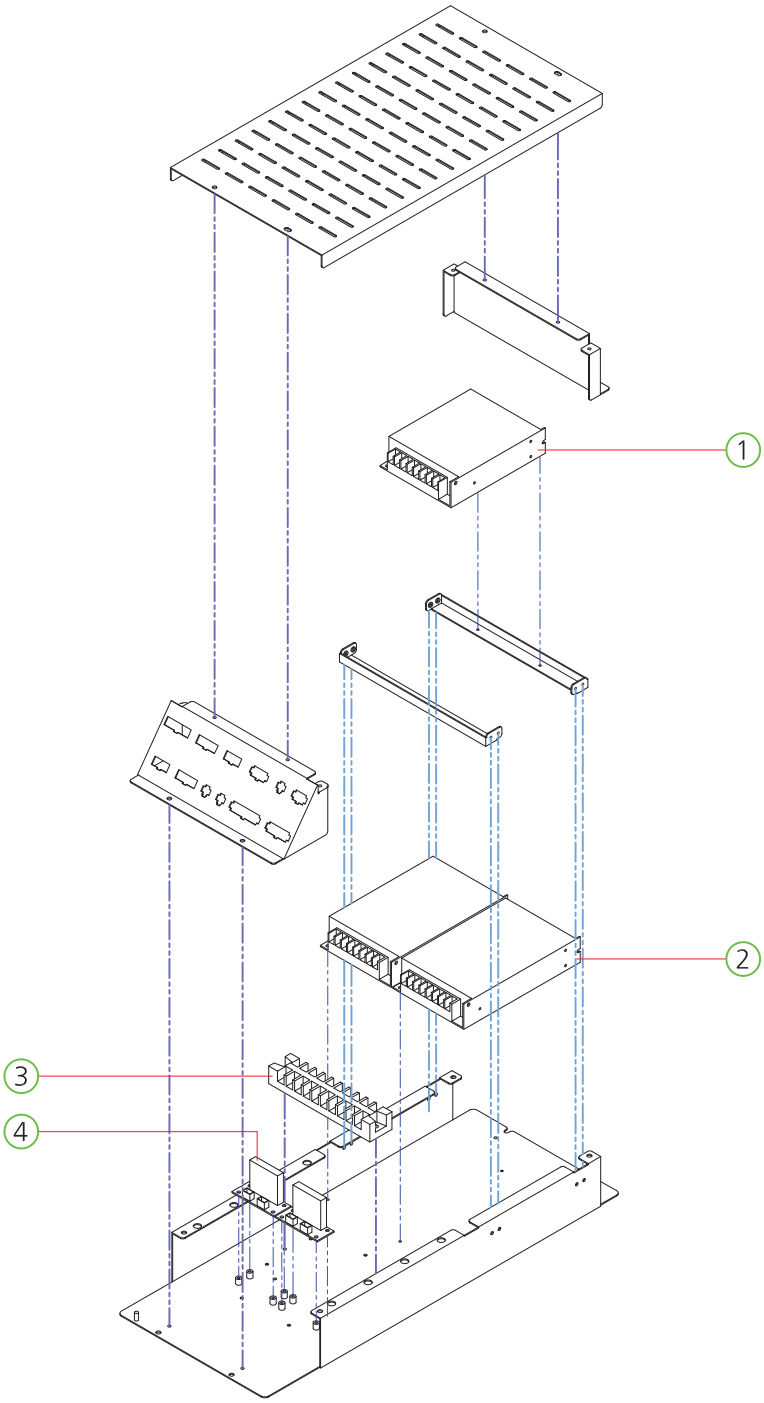


| NO. | PART NAME | SPEC. | QUANTITY | CODE NO. |
|---|---|---|---|---|
| 1 | POWER SMPS | LRS-100-5 | 1 | MELE0SMP095 |
| 2 | POWER SMPS | LRS-150F-12 | 2 | MELE0SMP090 |
| 3 | TERMINAL BLOCK | 250V, 10A | 1 | MELE0TEB003 |
| 4 | AC MOTOR SSR PCB ASS'Y | - | 2 | AENS0PCB001 |

# 7-4. SMPS POWER PART 02

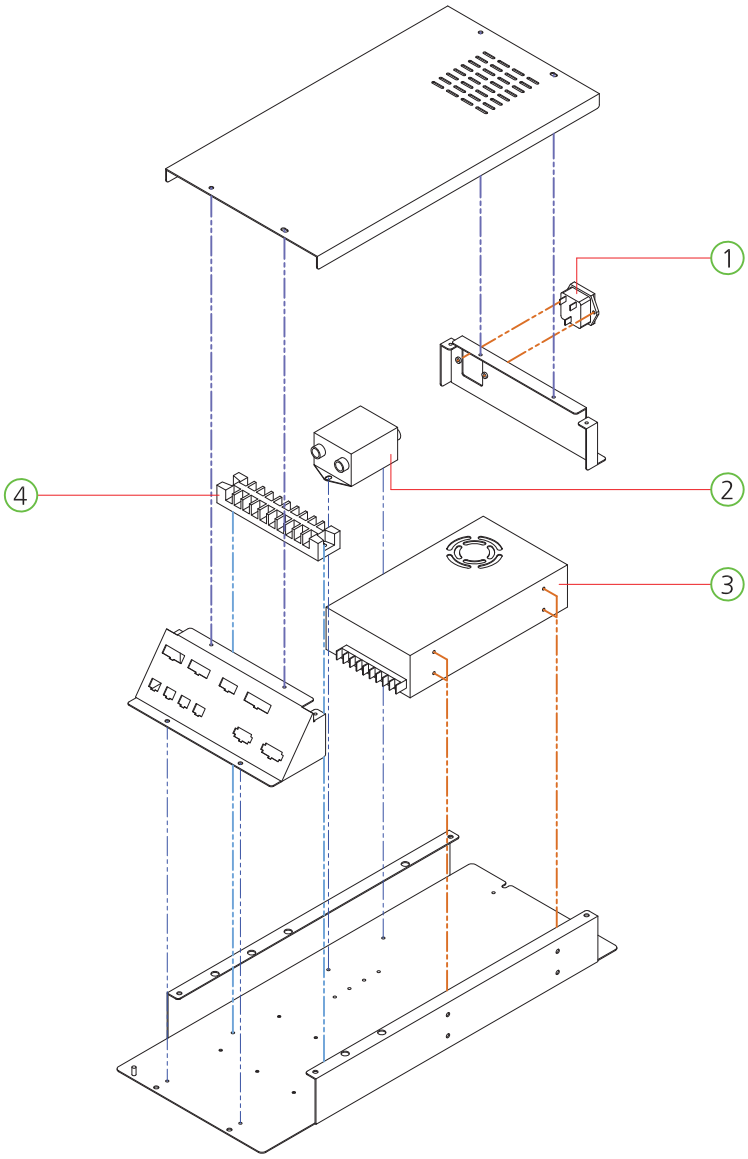


| NO. | PART NAME | SPEC. | QUANTITY | CODE NO. |
|---|---|---|---|---|
| 1 | AC INPUT | DAC-13H | 1 | MELE0SWI015 |
| | FUSE | 021800, MAP 250V, 10A | 2 | MELE0FUS018 |
| 2 | NOISE FILTER | ES1-F10 | 1 | MELE0NOI006 |
| 3 | SMPS POWER | SP-320-24V | 1 | MELE0SMP089 |
| 4 | TERMINAL BLOCK | 250V, 10A | 1 | MELE0TEB003 |

## 7-5. MAIN IO PART

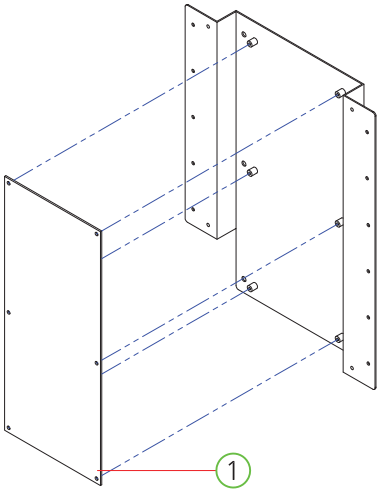


| NO. | PART NAME | SPEC. | QUANTITY | CODE NO. |
|---|---|---|---|---|
| 1 | MAIN PCB ASS'Y | - | 1 | ADCC0ASS015 |

## 7-6. SETUP PANEL PART

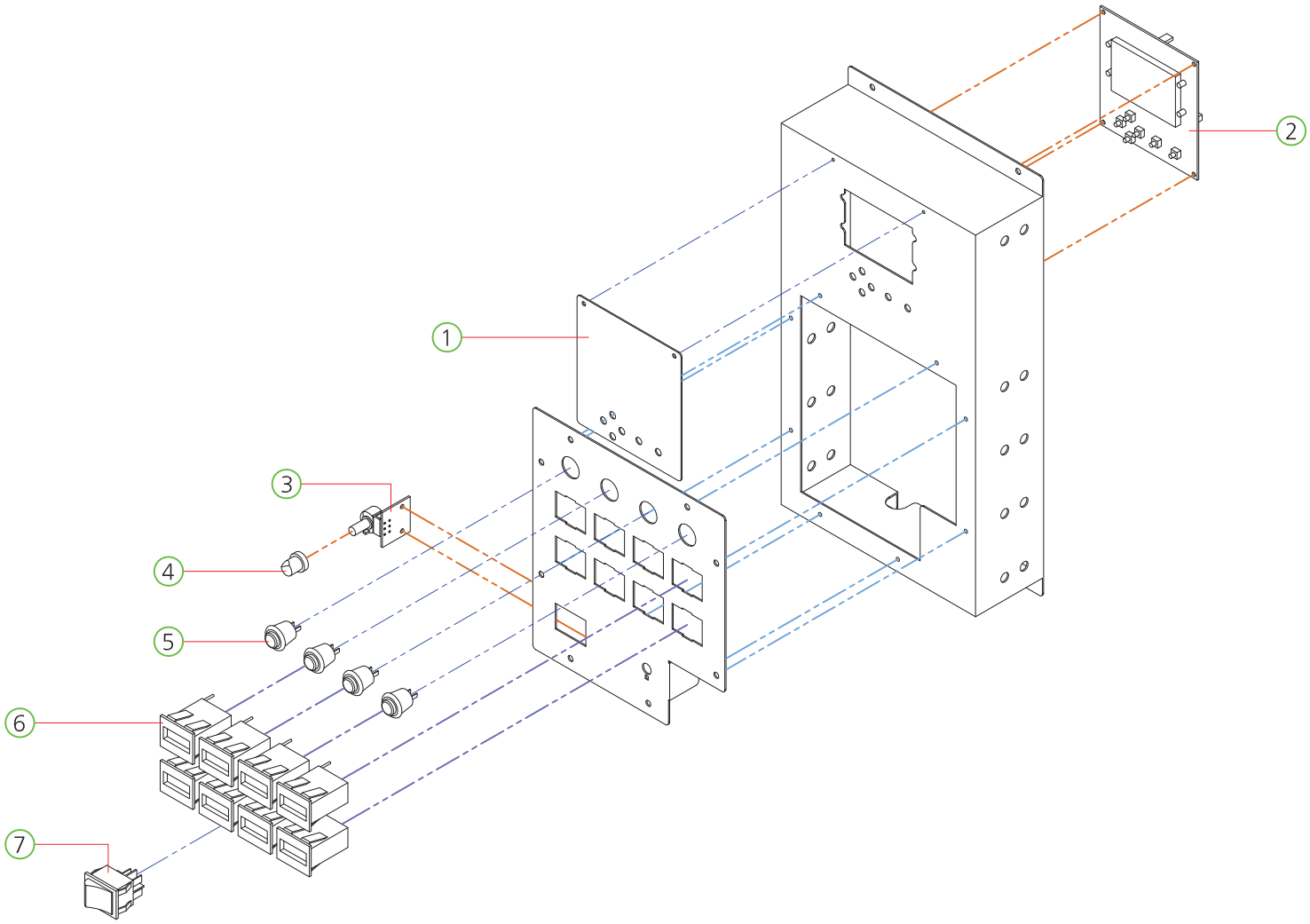


| NO. | PART NAME | SPEC. | QUANTITY | CODE NO. |
|---|---|---|---|---|
| 1 | SETUP PANEL BKT PET COVER | PET-1.0t | 1 | MSBP0ACR040 |
| 2 | SETUP LCD PCB ASS'Y | - | 1 | AZZZ0PCB113 |
| 3 | VOLUME PCB ASS'Y | 1 VOLUME | 1 | AHM20PCB016 |
| 4 | VOLUME KNOB | - | 1 | MELE0VOL007 |
| 5 | PUSH BUTTON SWITCH | HS412R | 4 | MELE0PUS001 |
| 6 | COUNTER | AMMC-712(OA127CL) | 8 | MZZZ0COU002 |
| 7 | ROCKER SWITCH | T-125,4PIN | 1 | MELE0SWI004 |

## 7-7. ELEVATOR HOPPER PART

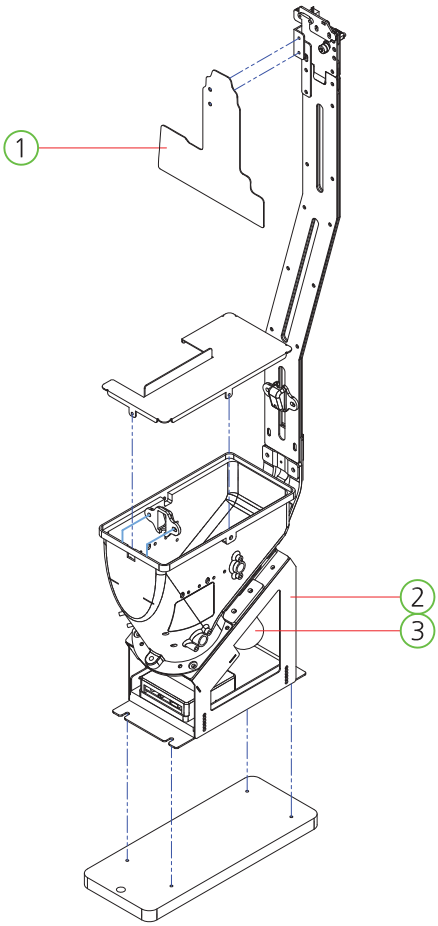


| NO. | PART NAME | SPEC. | QUANTITY | CODE NO. |
|---|---|---|---|---|
| 1 | ELEVATOR HOPPER COVER ACRYL | PET-1.0t | 1 | MDCC0ACR056 |
| 2 | ELEVATOR HOPPER ASS'Y | A TYPE | 1 | AZZZ0ELH001 |
| 3 | MOTOR | KGV-0060-ND4266X2 | 1 | MZZZ0ELH040 |

## 7-8. COIN BOX PART

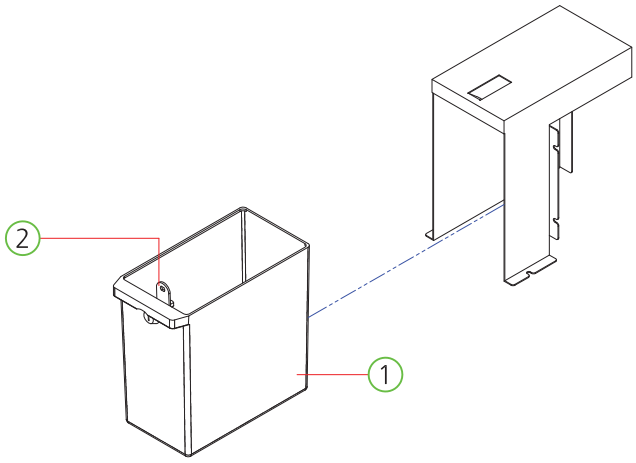


| NO. | PART NAME | SPEC. | QUANTITY | CODE NO. |
|---|---|---|---|---|
| 1 | COIN BOX | - | 1 | MDRE0PLA007 |
| 2 | KEY ASS'Y | 6001 | 1 | MZZZ0KEY075 |

# 7-9. COUNTER HOPPER PART

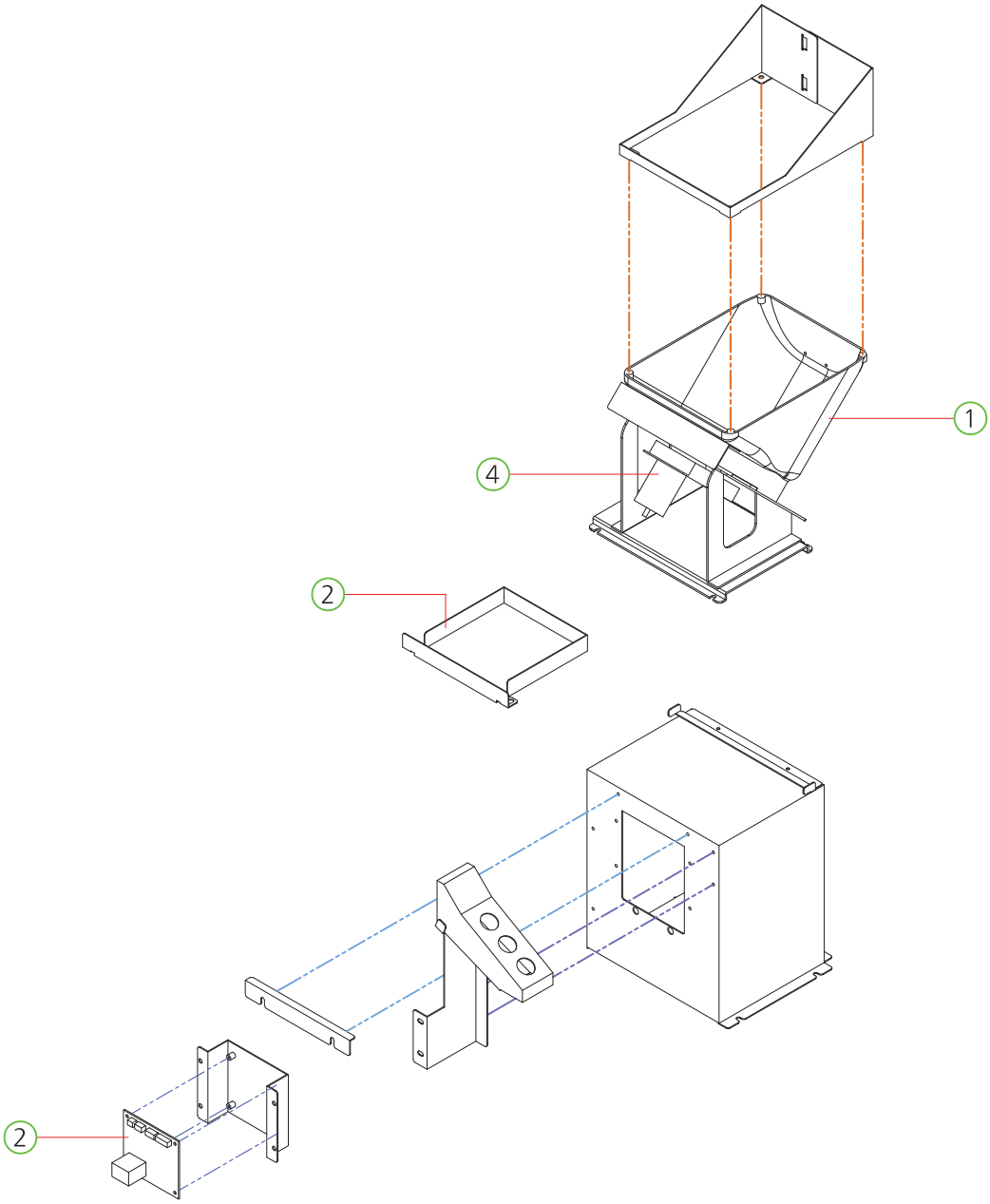


| NO. | PART NAME | SPEC. | QUANTITY | CODE NO. |
|---|---|---|---|---|
| 1 | MACHINE NEW | 20160211 | 1 | AZZZ0HOP023 |
| 2 | L6205 HOPPER PCB ASS'Y | - | 1 | AZZZ0PCB141 |
| 3 | COUNTER HOPPER BASE COVER | PET-1.0t | 1 | MAPB0ACR042 |
| 4 | MOTOR | KGE-0105-ND3657U2-01 | 1 | MZZZ0MOT043 |

## 7-10. TICKET DISPENSER PART

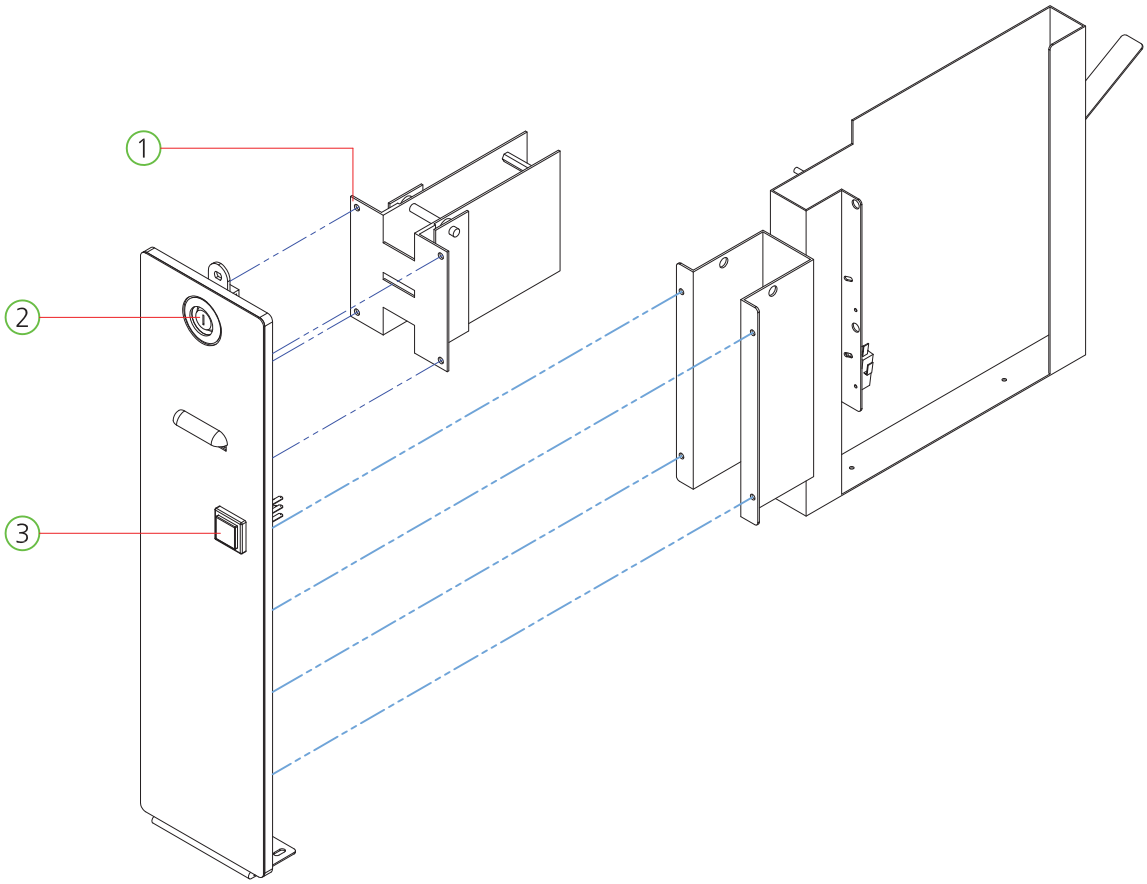


| NO. | PART NAME | SPEC. | QUANTITY | CODE NO. |
|---|---|---|---|---|
| 1 | TICKET DISPENSER | DL-1275 | 1 | MZZZ0TID008 |
| 2 | KEY ASS'Y | 7001 | 1 | MZZZ0KEY076 |
| 3 | BUTTON | AM1PB-26SH R12D | 1 | MMUM0BUT002 |

# 7-11. BILLBOARD PART

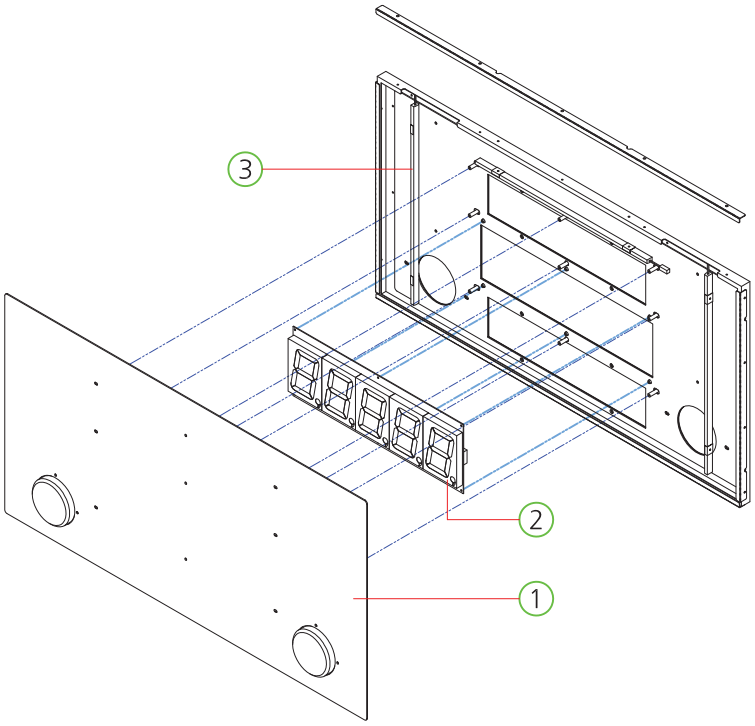


| NO. | PART NAME | SPEC. | QUANTITY | CODE NO. |
|---|---|---|---|---|
| 1 | BILLBOARD FRONT ACRYL | ACRYL-2.0t | 1 | MDCC0ACR002 |
| 2 | FND PCB ASS'Y | 90120-5 | 1 | AFND0PCB029 |
| 3 | LED BAR PCB ASS'Y | 460mm | 3 | AZZZ0PCB124 |

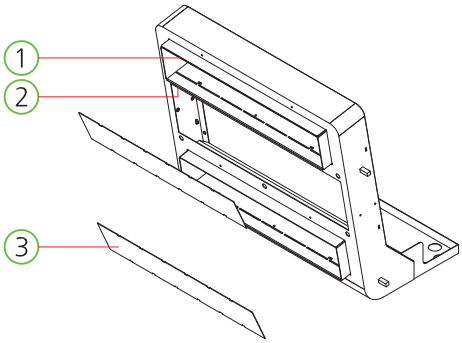


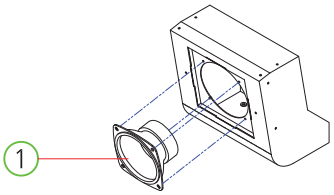


| NO. | PART NAME | SPEC. | Q'TY | CODE NO. |
|---|---|---|---|---|
| 1 | CARD DECO LIGHT ACRYL-A | ACRYL-3.0t | 2 | MDCC0ACR029 |
| 2 | CARD DECO LIGHT ACRYL-B | ACRYL-3.0t | 2 | MDCC0ACR030 |
| 3 | CARD DECO PANEL | - | 2 | MDCC0ACR006 |

| NO. | PART NAME | SPEC. | Q'TY | CODE NO. |
|---|---|---|---|---|
| 1 | SPEAKER | MID4.5"+TW1/2" 8Ω | 1 | MZZZ0SPE021 |

# 7-12. BILLBOARD CORNER DECO PART

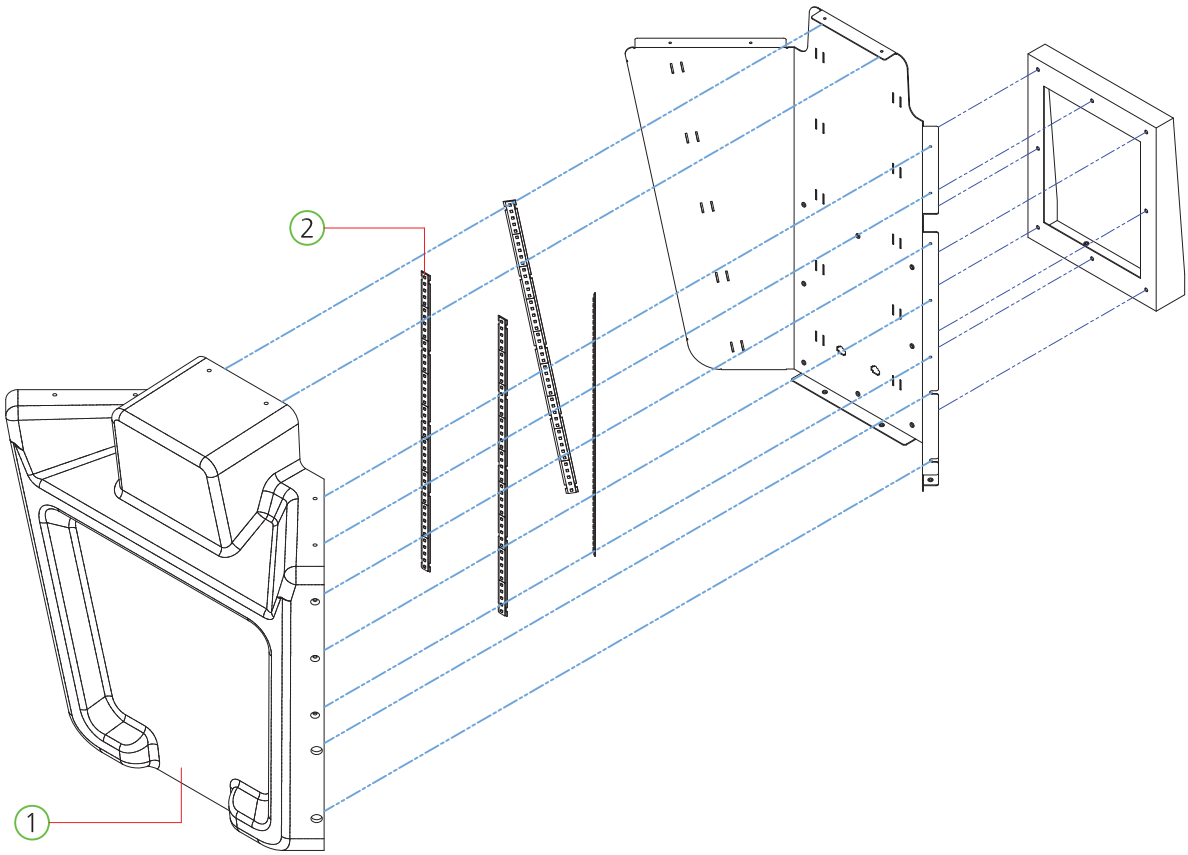


| NO. | PART NAME | SPEC. | QUANTITY | CODE NO. |
|---|---|---|---|---|
| 1 | BILLBOARD CORNER DECO COVER | - | 1 | MDCC0PLA001 |
| 2 | T5050 TOP300 | RGB FLEX LED | 4 | AELE0LED003 |

# 7-13. SCORE BOARD PANEL PART 01

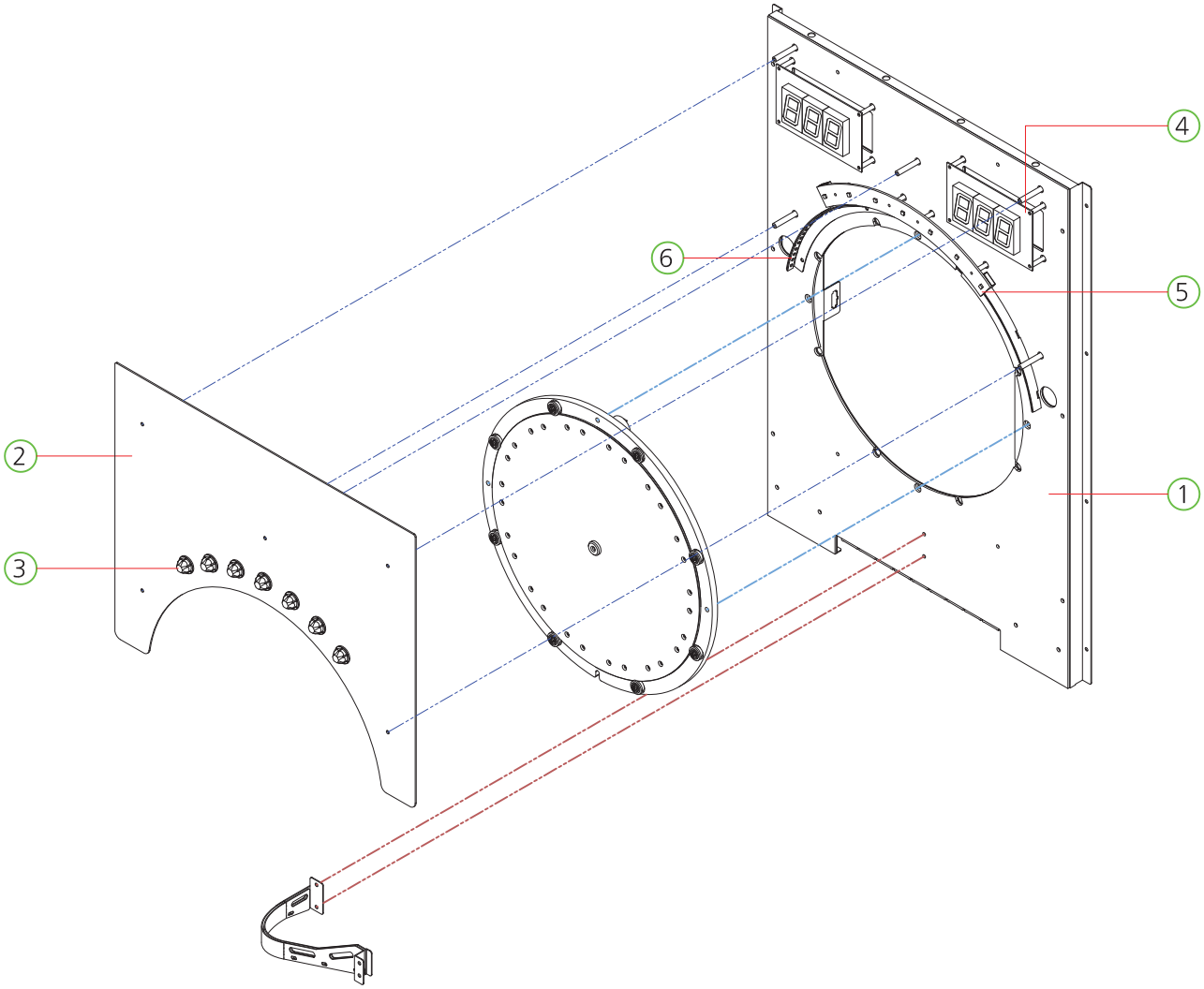


| NO. | PART NAME | SPEC. | QUANTITY | CODE NO. |
|---|---|---|---|---|
| 1 | SCORE BOARD MAIN ACRYL | ACRYL-3.0t | 1 | MDCC0ACR018 |
| 2 | SCORE BOARD FND COVER ACRYL | ACRYL-2.0t | 1 | MDCC0ACR017 |
| 3 | LED CAP | Ø 20 | 7 | MZZZ0PLA037 |
| 4 | BONUS FND PCB ASS'Y | - | 2 | AFND0PCB028 |
| 5 | WHEEL SPIN LED PCB ASS'Y | - | 1 | ADCC0PCB004 |
| 6 | FLEXIBLE PCB ASS'Y | SMD 3528 GREEN | 1 | AELE0LED002 |

# 7-14. SCOR BOARD PANEL PART 02

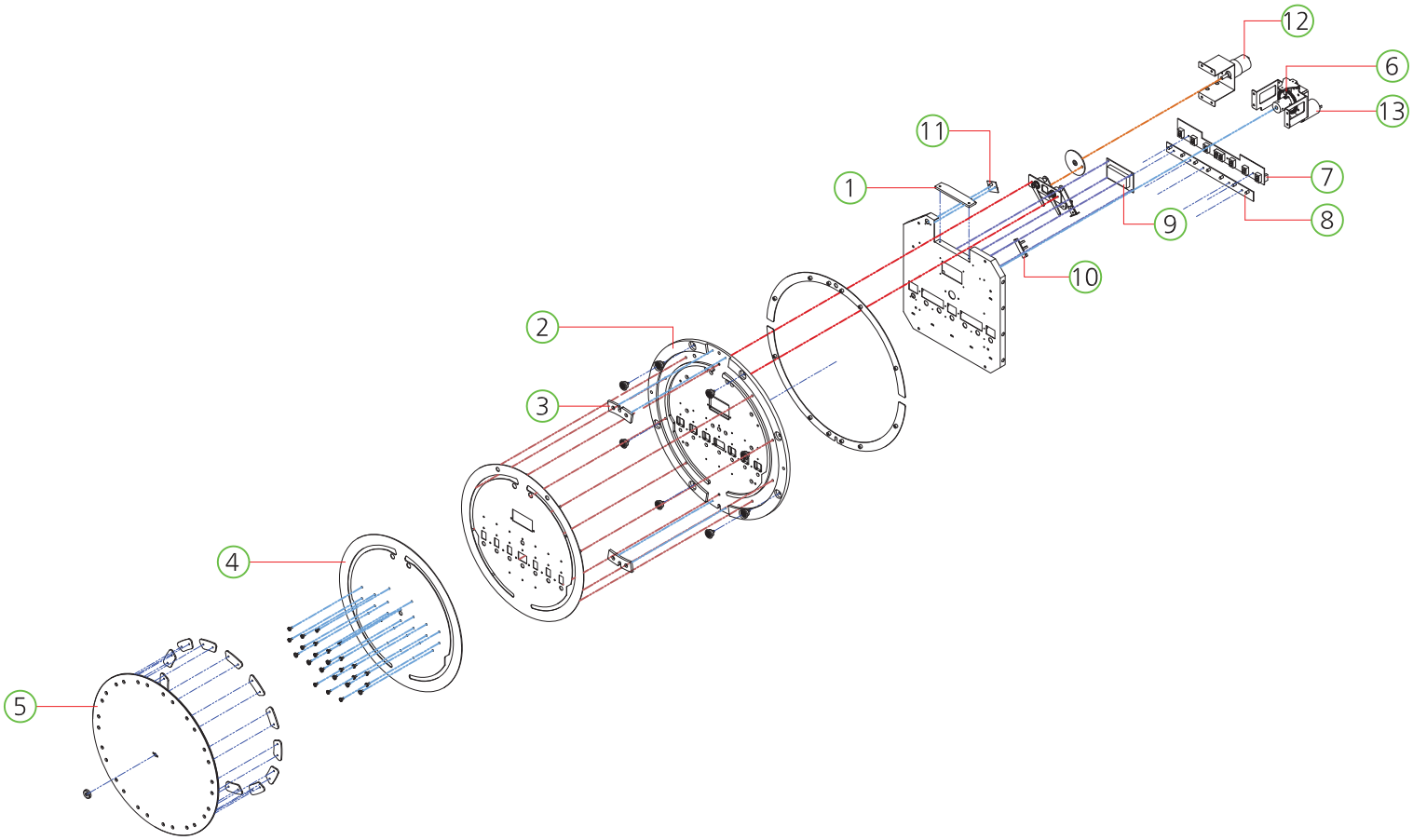


| NO. | PART NAME | SPEC. | QUANTITY | CODE NO. |
|---|---|---|---|---|
| 1 | WIPER WING GUIDE BLOCK | ACRYL-5.0t | 1 | MDCC0ACR021 |
| 2 | MEDAL CIRCULATION NAIL PANEL | PC-5.0t, ACRYL-5.0t | 1 | MDCC0ACR013 |
| 3 | MEDAL INLET GUIDE BLOCK | ACRYL-3.0t | 2 | - |
| 4 | MEDAL CIRCULATION FRONT COVER | ACRYL-1.5t | 1 | MDCC0ACR025 |
| 5 | MEDAL CIRCULATION OUTER RING | PC-4.5t | 1 | MDCC0ACR014 |
| 6 | PHOTO INT1(ANGLE) PCB ASS'Y | - | 1 | AZZZ0PCB103 |
| 7 | MEDAL CIRCULATION FND PCB ASS'Y | - | 1 | ADCC0PCB009 |
| 8 | MEDAL CIRCULATION CHECK-A PCB ASS'Y | - | 1 | ADCC0PCB006 |
| 9 | FND PCB ASS'Y | 2029-3 | 1 | AFND0PCB028 |
| 10 | PHOTO INT1(ANGLE) PCB ASS'Y | - | 1 | AZZZ0PCB103 |
| 11 | MEDAL CIRCULATION CHECK-B PCB ASS'Y | - | 1 | ADCC0PCB007 |
| 12 | DC MOTOR | KGC-3429, 1/150 | 1 | MZZZ0MOT109 |
| 13 | DC MOTOR | KGE-3448 S1, 1/687 | 1 | MZZZ0MOT108 |

# 7-15. PUSHER PANEL PART

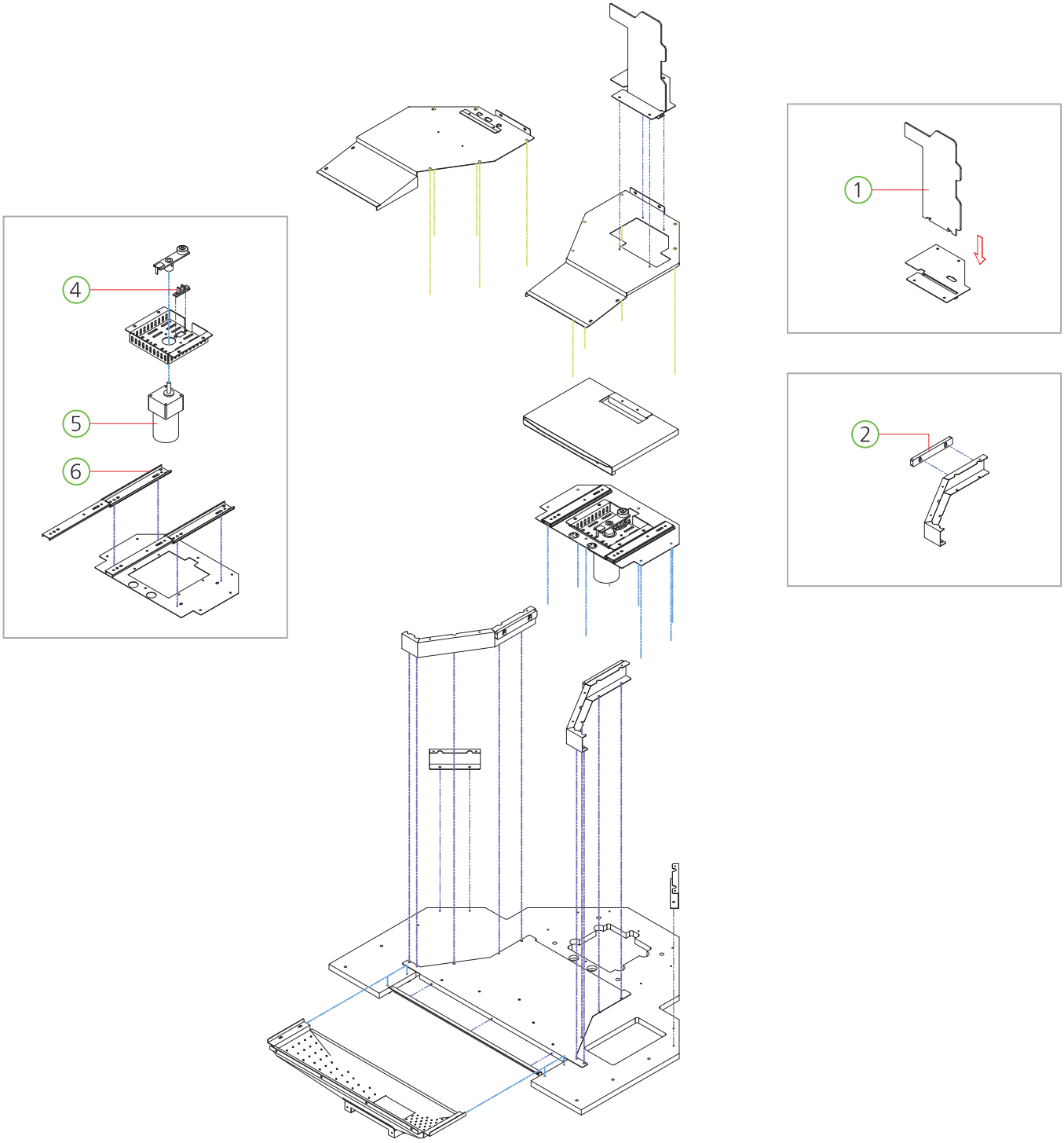


| NO. | PART NAME | SPEC. | QUANTITY | CODE NO. |
|---|---|---|---|---|
| 1 | PUSHER ELEV HOPPER DECO ACRYL | ACRYL-3.0t | 1 | MDCC0ACR015 |
| 2 | PUSHER ELEV HOPPER DECO ACRYL | ACRYL-8.0t | 2 | MDCC0ACR015 |
| 3 | PHOTO INT-1 ASS'Y | - | 1 | ACIR0PCB011 |
| 4 | MOTOR | K6IG6N_110V | 1 | MZZZ0MOT085 |
| | GEAR HEAD | K6G90C | 1 | MSAW0ZZZ008 |
| 5 | PUAHER GUIDE RAIL | 200mm | 2 | MSPB0ZZZ011 |

# 7-16. FRONT ROLLER PART

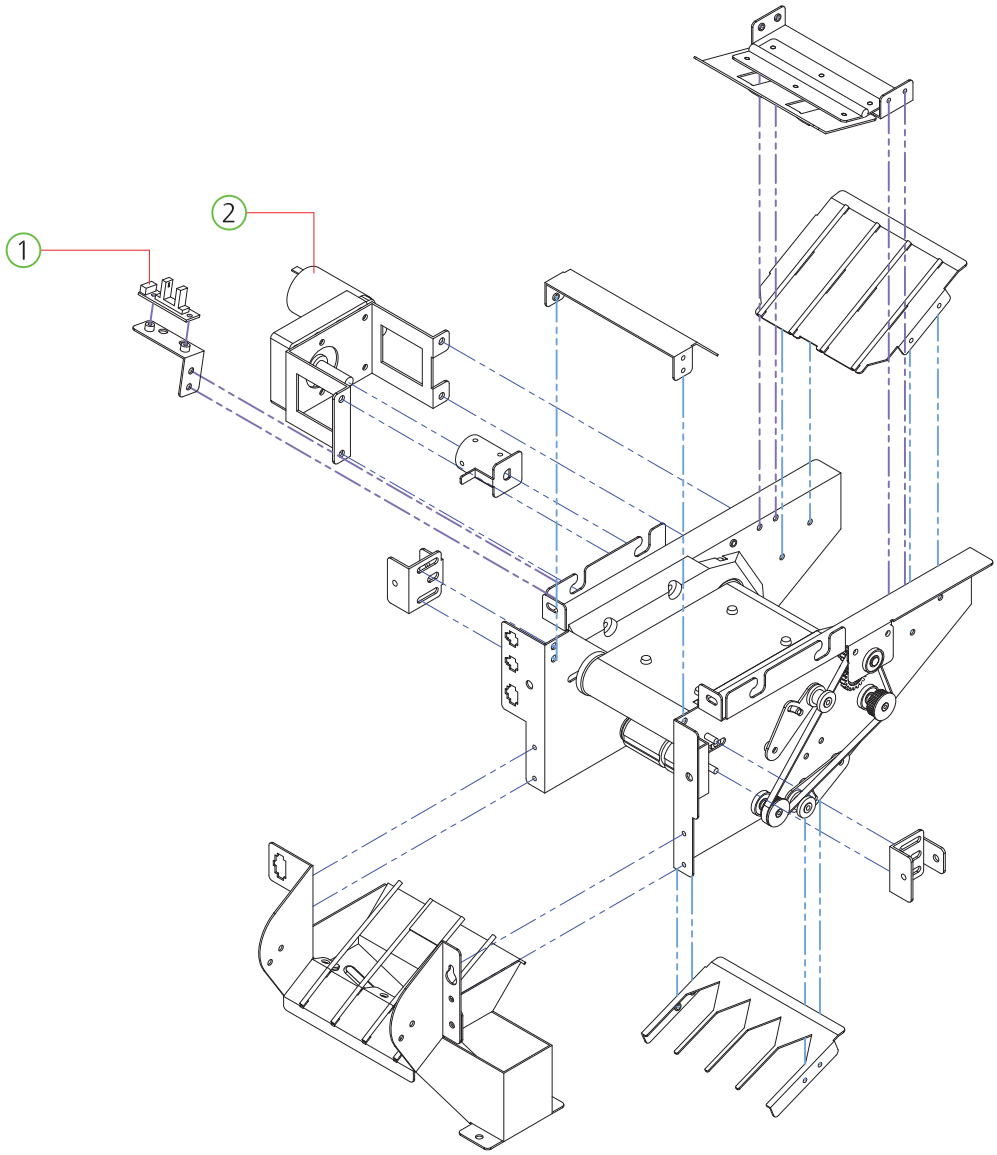


| NO. | PART NAME | SPEC. | QUANTITY | CODE NO. |
|---|---|---|---|---|
| 1 | PHOTO INT-1 PCB ASS'Y | - | 1 | ACIR0PCB011 |
| 2 | DC MOTOR | KGE-0162-KA3448T1<br>12vdc, 7500rpm | 1 | MZZZ0MOT087 |

# 7-17. CARD DISPENSER PART

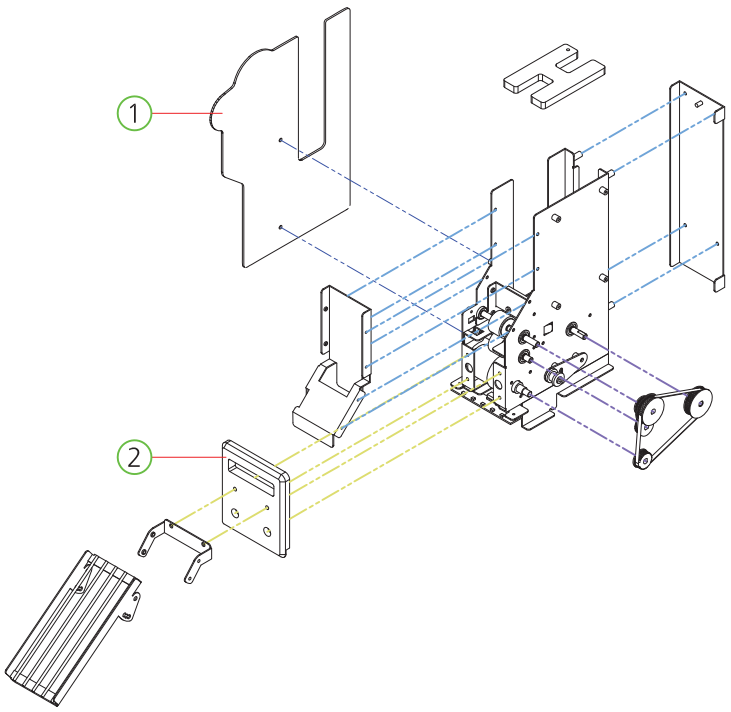


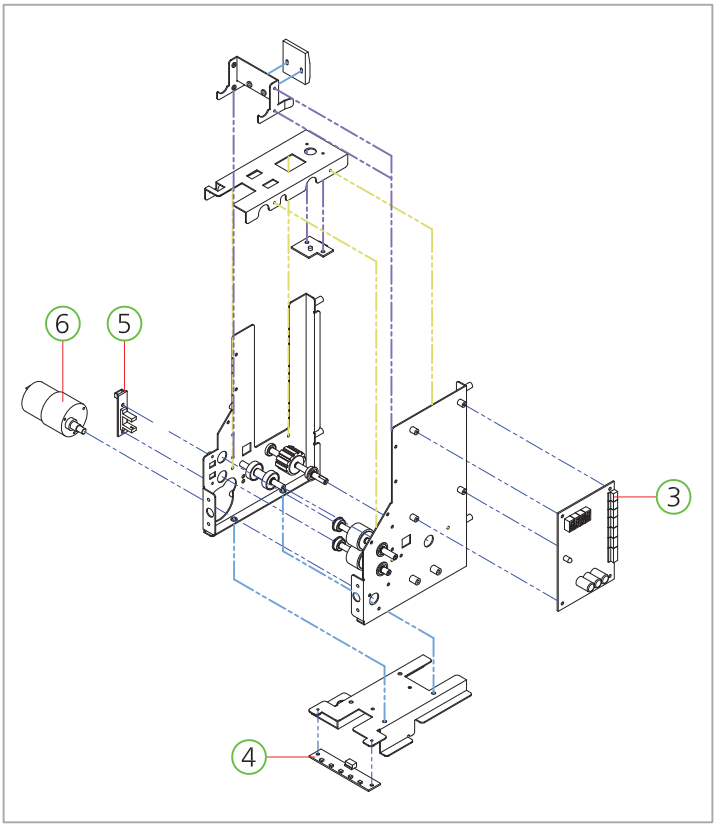


| NO. | PART NAME | SPEC. | QUANTITY | CODE NO. |
|---|---|---|---|---|
| 1 | CARD DISPENSER DECO ACRYL | PC-3.0t | 1 | MDCC0ACR001 |
| 2 | CARD DISPENSER FRONT MASK | ACRYL-10.0t | 1 | MSBP0ACR019 |
| 3 | CARD DISPENSER IO PCB ASS'Y | - | 1 | ASBP0PCB008 |
| 4 | LED PCB ASS'Y | - | 1 | AMUM0PCB005 |
| 5 | PHOTO INT1(ANGLE) PCB ASS'Y | - | 1 | AZZZ0PCB103 |
| 6 | DC MOTOR | KGC-3429-075-1/40_162.5RPM | 1 | MZZZ0MOT089 |

## 7-18. GLASS DOOR PART

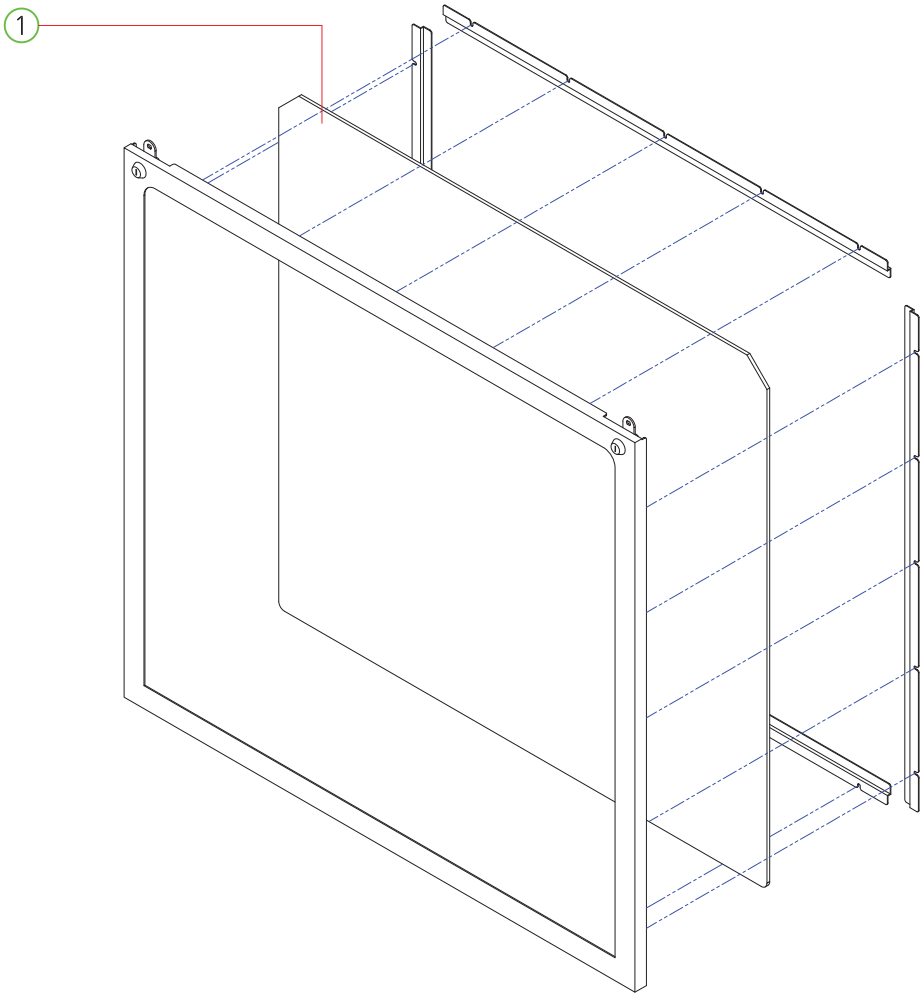


| NO. | PART NAME | SPEC. | QUANTITY | CODE NO. |
|---|---|---|---|---|
| 1 | FRONT GLASS | GLASS-5.0t | 1 | MDCC0GLA001 |

# 7-19. FRONT DOOR PART

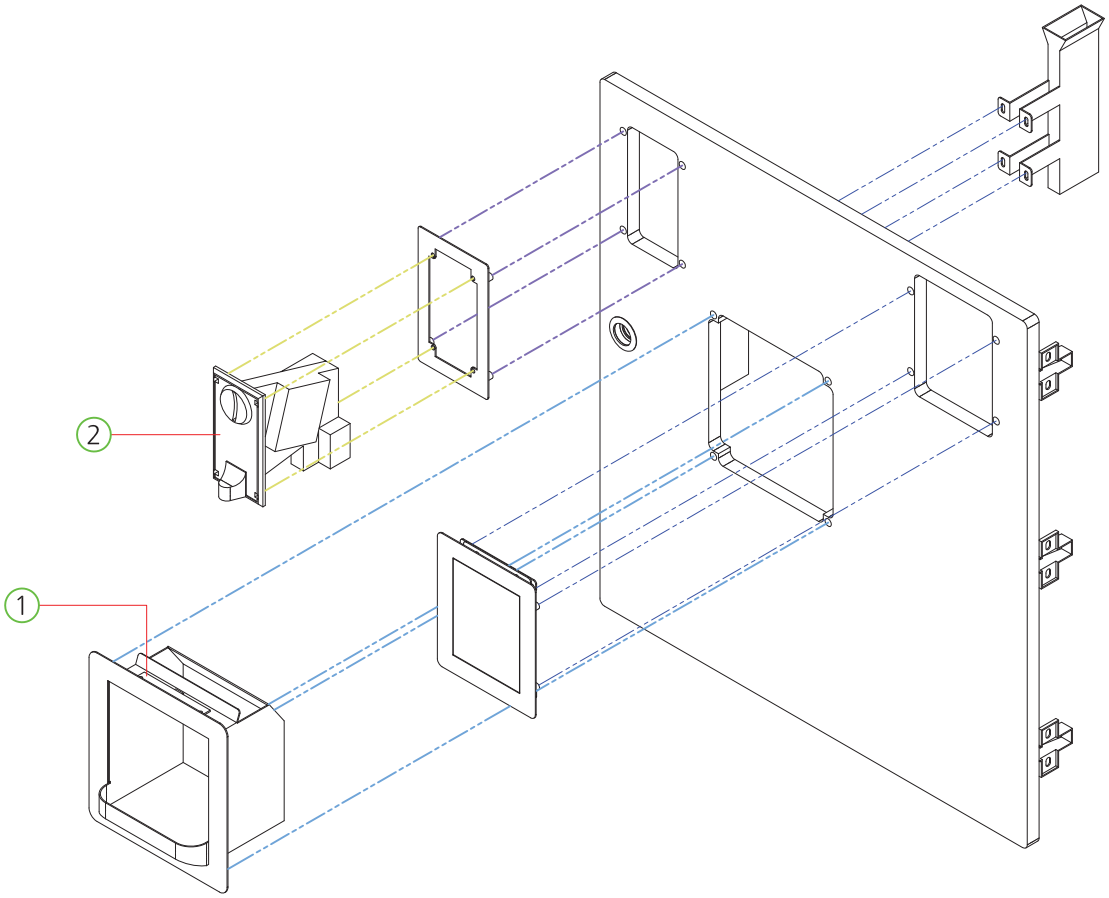


| NO. | PART NAME | SPEC. | QUANTITY | CODE NO. |
|---|---|---|---|---|
| 1 | LED PCB ASS'Y | - | 1 | AMUM0PCB005 |
| 2 | COIN SELECTOR | TW-389 | 1 | MZZZ0COS052 |

# IN CASE OF INTERNAL DUST & STATIC ELECTRICITY OCCURRENCE

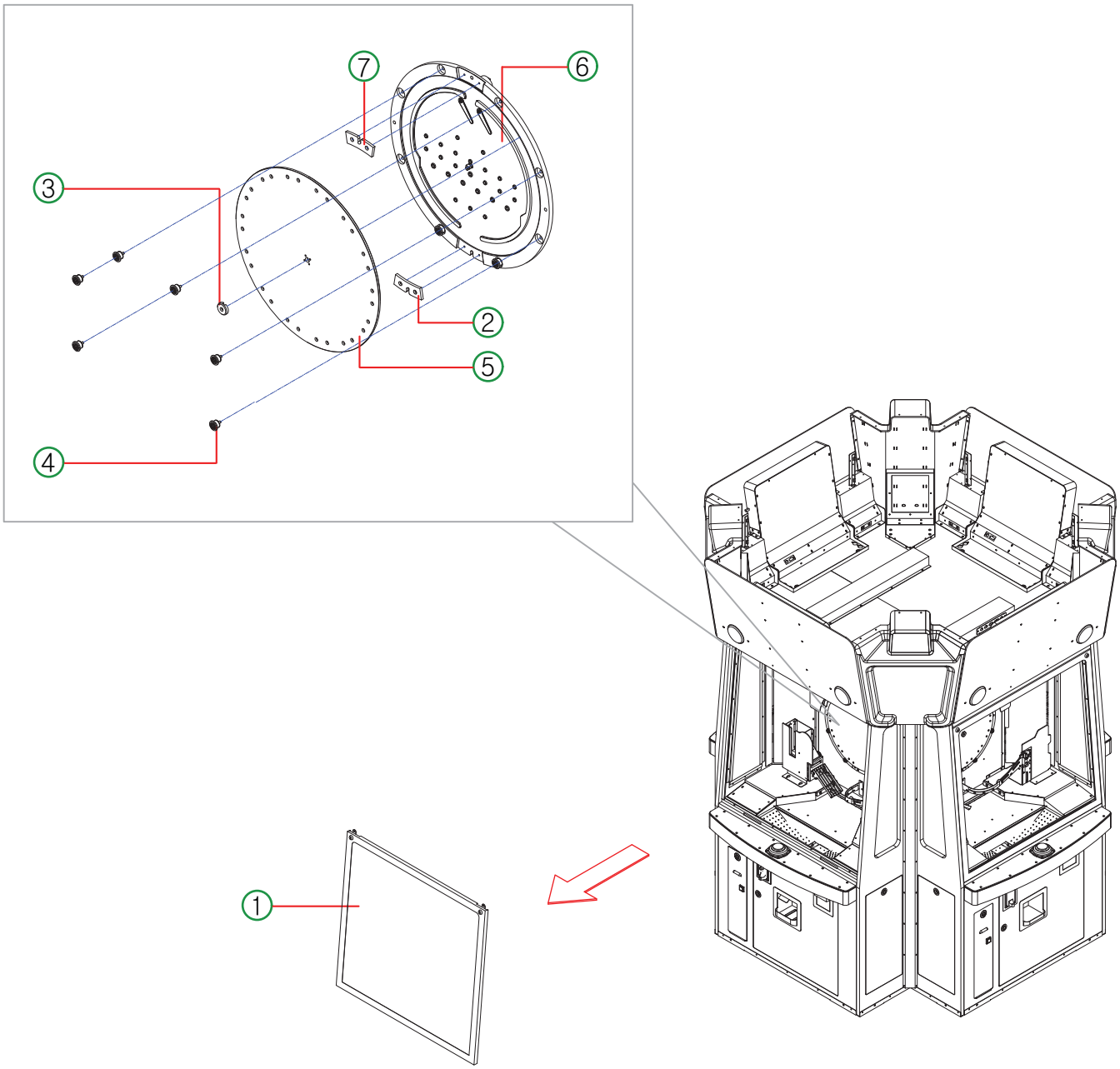


- Use the key to open the ① front door.
- Remove the ② MEDAL INLET GUIDE BLOCK (3pcs) and remove the magnetic coin (8EA).
- Use the wrench to release the ④ BEARING ASS'Y (6pcs) and ③ RING GUIDE workpiece (1pcs) as indicated picturepicture.
- Then, wipe inside of plate with the electrostatic accumulator with a soft cloth. ( MAGNETIC COIN & ⑤⑥ FRONT, REAR ACRYLIC )
- Remove the ⑦ MEDAL INLET GUIDE BLOCK (3pcs) and supply the magnetic coin (8EA).
- After cleaning, assemble in reverse order of disassembly.

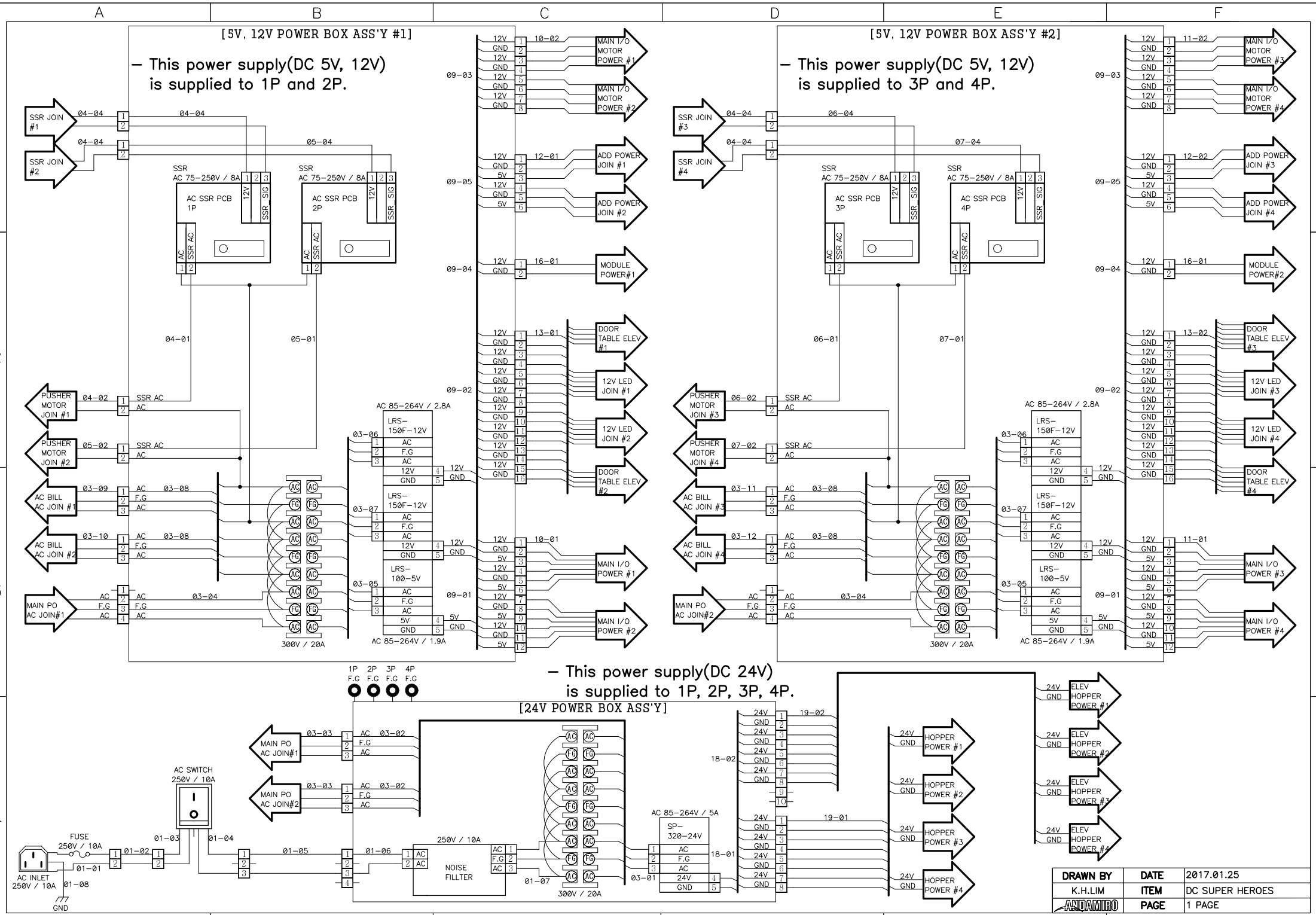
[5V, 12V POWER BOX ASS'Y #1]
– This power supply(DC 5V, 12V) is supplied to 1P and 2P.
[5V, 12V POWER BOX ASS'Y #2]
– This power supply(DC 5V, 12V) is supplied to 3P and 4P.
– This power supply(DC 24V) is supplied to 1P, 2P, 3P, 4P.
[24V POWER BOX ASS'Y]
SSR JOIN #1
SSR JOIN #2
SSR JOIN #3
SSR JOIN #4
SSR AC 75-250V / 8A
AC SSR PCB 1P
AC SSR PCB 2P
AC SSR PCB 3P
AC SSR PCB 4P
PUSHER MOTOR JOIN #1
PUSHER MOTOR JOIN #2
PUSHER MOTOR JOIN #3
PUSHER MOTOR JOIN #4
AC BILL AC JOIN #1
AC BILL AC JOIN #2
AC BILL AC JOIN #3
AC BILL AC JOIN #4
MAIN PO AC JOIN#1
MAIN PO AC JOIN#2
300V / 20A
AC 85-264V / 2.8A
LRS-150F-12V
LRS-100-5V
AC 85-264V / 1.9A
MAIN I/O MOTOR POWER #1
MAIN I/O MOTOR POWER #2
MAIN I/O MOTOR POWER #3
MAIN I/O MOTOR POWER #4
ADD POWER JOIN #1
ADD POWER JOIN #2
ADD POWER JOIN #3
ADD POWER JOIN #4
MODULE POWER#1
MODULE POWER#2
DOOR TABLE ELEV #1
DOOR TABLE ELEV #2
DOOR TABLE ELEV #3
DOOR TABLE ELEV #4
12V LED JOIN #1
12V LED JOIN #2
12V LED JOIN #3
12V LED JOIN #4
MAIN I/O POWER #1
MAIN I/O POWER #2
MAIN I/O POWER #3
MAIN I/O POWER #4
1P F.G
2P F.G
3P F.G
4P F.G
AC SWITCH 250V / 10A
FUSE 250V / 10A
AC INLET 250V / 10A
GND
250V / 10A
NOISE FILLTER
AC 85-264V / 5A
SP-320-24V
HOPPER POWER #1
HOPPER POWER #2
HOPPER POWER #3
HOPPER POWER #4
ELEV HOPPER POWER #1
ELEV HOPPER POWER #2
ELEV HOPPER POWER #3
ELEV HOPPER POWER #4
DRAWN BY
K.H.LIM
DATE
2017.01.25
ITEM
DC SUPER HEROES
PAGE
1 PAGE
ANDAMIRO

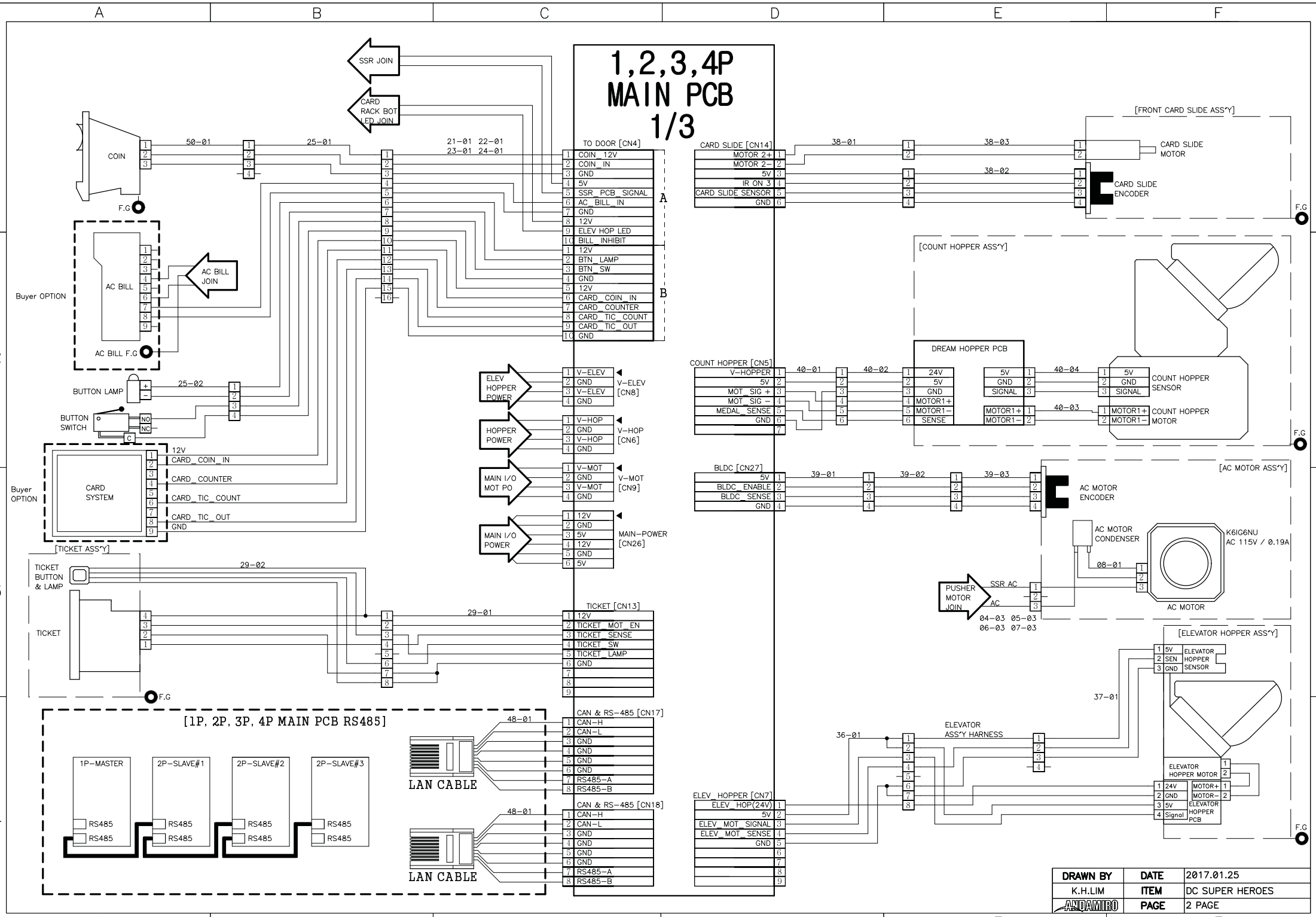
1,2,3,4P
MAIN PCB
1/3
SSR JOIN
CARD RACK BOT LED JOIN
COIN
F.G
50-01
25-01
21-01 22-01
23-01 24-01
TO DOOR [CN4]
COIN_12V
COIN_IN
GND
5V
SSR_PCB_SIGNAL
AC_BILL_IN
GND
12V
ELEV HOP LED
BILL_INHIBIT
12V
BTN_LAMP
BTN_SW
GND
12V
CARD_COIN_IN
CARD_COUNTER
CARD_TIC_COUNT
CARD_TIC_OUT
GND
A
B
Buyer OPTION
AC BILL
AC BILL JOIN
AC BILL F.G
BUTTON LAMP
25-02
BUTTON SWITCH
NO
NC
C
Buyer OPTION
CARD SYSTEM
12V
CARD_COIN_IN
CARD_COUNTER
CARD_TIC_COUNT
CARD_TIC_OUT
GND
ELEV HOPPER POWER
V-ELEV
GND
V-ELEV
V-ELEV [CN8]
HOPPER POWER
V-HOP
GND
V-HOP
V-HOP [CN6]
MAIN I/O MOT PO
V-MOT
GND
V-MOT
V-MOT [CN9]
MAIN I/O POWER
12V
GND
5V
12V
GND
5V
MAIN-POWER [CN26]
[TICKET ASS'Y]
TICKET BUTTON & LAMP
TICKET
29-02
29-01
TICKET [CN13]
12V
TICKET_MOT_EN
TICKET_SENSE
TICKET_SW
TICKET_LAMP
GND
F.G
[1P, 2P, 3P, 4P MAIN PCB RS485]
1P-MASTER
2P-SLAVE#1
2P-SLAVE#2
2P-SLAVE#3
RS485
RS485
48-01
LAN CABLE
CAN & RS-485 [CN17]
CAN-H
CAN-L
GND
GND
GND
GND
RS485-A
RS485-B
CAN & RS-485 [CN18]
CAN-H
CAN-L
GND
GND
GND
GND
RS485-A
RS485-B
CARD SLIDE [CN14]
MOTOR 2+
MOTOR 2-
5V
IR ON 3
CARD SLIDE SENSOR
GND
38-01
38-03
38-02
[FRONT CARD SLIDE ASS'Y]
CARD SLIDE MOTOR
CARD SLIDE ENCODER
F.G
[COUNT HOPPER ASS'Y]
DREAM HOPPER PCB
COUNT HOPPER [CN5]
V-HOPPER
5V
MOT_SIG +
MOT_SIG -
MEDAL_SENSE
GND
40-01
40-02
24V
5V
GND
MOTOR1+
MOTOR1-
SENSE
5V
GND
SIGNAL
MOTOR1+
MOTOR1-
40-04
40-03
COUNT HOPPER SENSOR
COUNT HOPPER MOTOR
F.G
BLDC [CN27]
5V
BLDC_ENABLE
BLDC_SENSE
GND
39-01
39-02
39-03
[AC MOTOR ASS'Y]
AC MOTOR ENCODER
AC MOTOR CONDENSER
K6IG6NU
AC 115V / 0.19A
08-01
PUSHER MOTOR JOIN
SSR AC
AC
04-03 05-03
06-03 07-03
AC MOTOR
[ELEVATOR HOPPER ASS'Y]
5V
SEN
GND
ELEVATOR HOPPER SENSOR
37-01
36-01
ELEVATOR ASS'Y HARNESS
ELEVATOR HOPPER MOTOR
24V
GND
5V
Signal
MOTOR+
MOTOR-
ELEVATOR HOPPER PCB
ELEV_HOPPER [CN7]
ELEV_HOP(24V)
5V
ELEV_MOT_SIGNAL
ELEV_MOT_SENSE
GND
F.G
DRAWN BY
K.H.LIM
DATE
2017.01.25
ITEM
DC SUPER HEROES
PAGE
2 PAGE
ANDAMIRO

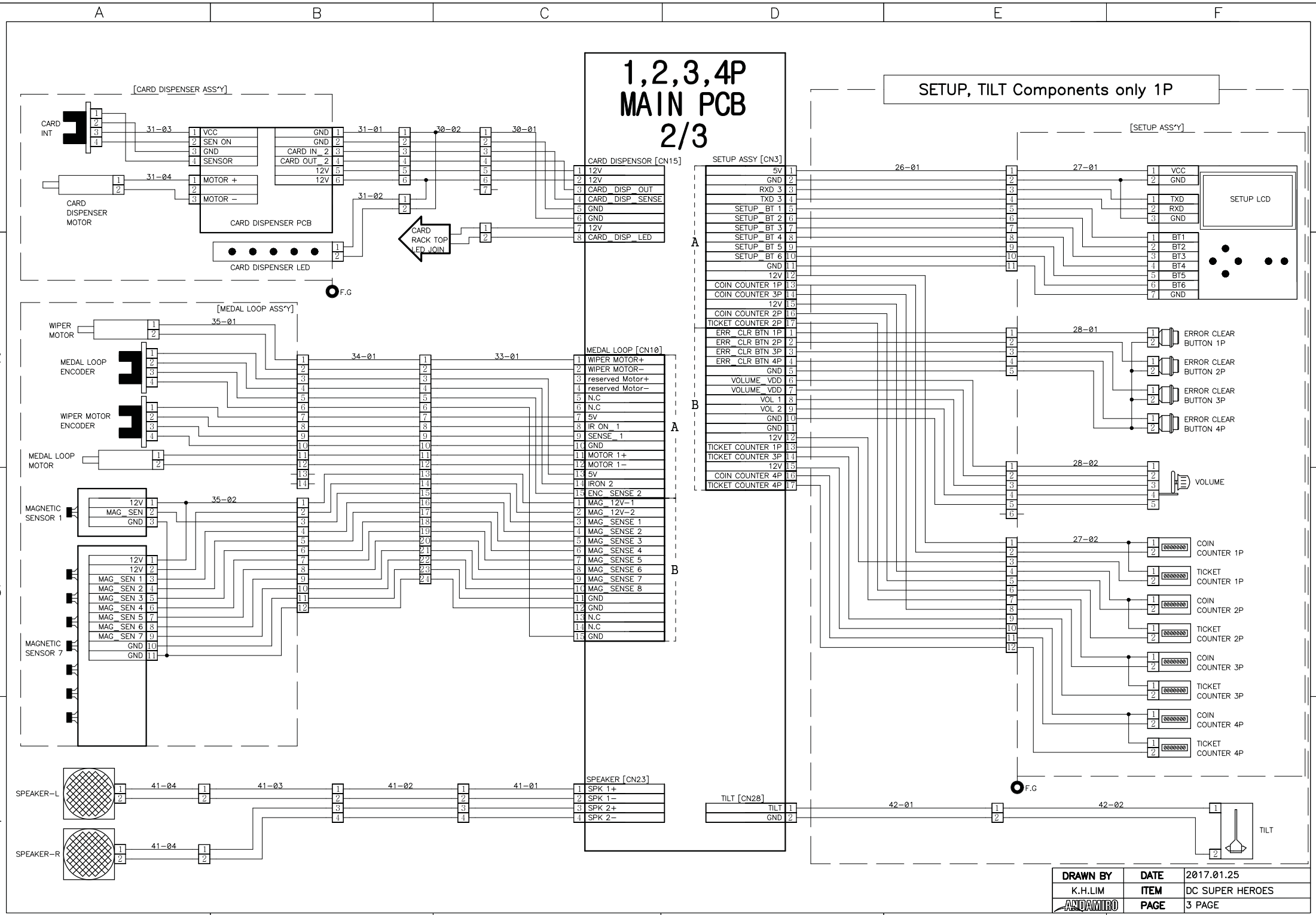
1,2,3,4P
MAIN PCB
2/3
SETUP, TILT Components only 1P
[CARD DISPENSER ASS'Y]
CARD INT
31-03
VCC
SEN ON
GND
SENSOR
31-04
MOTOR +
MOTOR −
CARD DISPENSER MOTOR
GND
GND
CARD IN_2
CARD OUT_2
12V
12V
CARD DISPENSER PCB
31-01
30-02
30-01
31-02
CARD RACK TOP LED JOIN
CARD DISPENSER LED
F.G
CARD DISPENSOR [CN15]
12V
12V
CARD_DISP_OUT
CARD_DISP_SENSE
GND
GND
12V
CARD_DISP_LED
[MEDAL LOOP ASS'Y]
WIPER MOTOR
35-01
MEDAL LOOP ENCODER
WIPER MOTOR ENCODER
MEDAL LOOP MOTOR
34-01
33-01
MAGNETIC SENSOR 1
12V
MAG_SEN
GND
35-02
MAGNETIC SENSOR 7
12V
12V
MAG_SEN 1
MAG_SEN 2
MAG_SEN 3
MAG_SEN 4
MAG_SEN 5
MAG_SEN 6
MAG_SEN 7
GND
GND
MEDAL LOOP [CN10]
WIPER MOTOR+
WIPER MOTOR−
reserved Motor+
reserved Motor−
N.C
N.C
5V
IR ON_1
SENSE_1
GND
MOTOR 1+
MOTOR 1−
5V
IRON 2
ENC_SENSE 2
MAG_12V−1
MAG_12V−2
MAG_SENSE 1
MAG_SENSE 2
MAG_SENSE 3
MAG_SENSE 4
MAG_SENSE 5
MAG_SENSE 6
MAG_SENSE 7
MAG_SENSE 8
GND
GND
N.C
N.C
GND
A
B
SPEAKER-L
SPEAKER-R
41-04
41-03
41-02
41-01
SPEAKER [CN23]
SPK 1+
SPK 1−
SPK 2+
SPK 2−
SETUP ASSY [CN3]
5V
GND
RXD 3
TXD 3
SETUP_BT 1
SETUP_BT 2
SETUP_BT 3
SETUP_BT 4
SETUP_BT 5
SETUP_BT 6
GND
12V
COIN COUNTER 1P
COIN COUNTER 3P
12V
COIN COUNTER 2P
TICKET COUNTER 2P
ERR_CLR BTN 1P
ERR_CLR BTN 2P
ERR_CLR BTN 3P
ERR_CLR BTN 4P
GND
VOLUME_VDD
VOLUME_VDD
VOL 1
VOL 2
GND
GND
12V
TICKET COUNTER 1P
TICKET COUNTER 3P
12V
COIN COUNTER 4P
TICKET COUNTER 4P
TILT [CN28]
TILT
GND
26-01
[SETUP ASS'Y]
27-01
VCC
GND
TXD
RXD
GND
BT1
BT2
BT3
BT4
BT5
BT6
GND
SETUP LCD
28-01
ERROR CLEAR BUTTON 1P
ERROR CLEAR BUTTON 2P
ERROR CLEAR BUTTON 3P
ERROR CLEAR BUTTON 4P
28-02
VOLUME
27-02
COIN COUNTER 1P
TICKET COUNTER 1P
COIN COUNTER 2P
TICKET COUNTER 2P
COIN COUNTER 3P
TICKET COUNTER 3P
COIN COUNTER 4P
TICKET COUNTER 4P
F.G
42-01
42-02
TILT
DRAWN BY
K.H.LIM
DATE
2017.01.25
ITEM
DC SUPER HEROES
ANDAMIRO
PAGE
3 PAGE

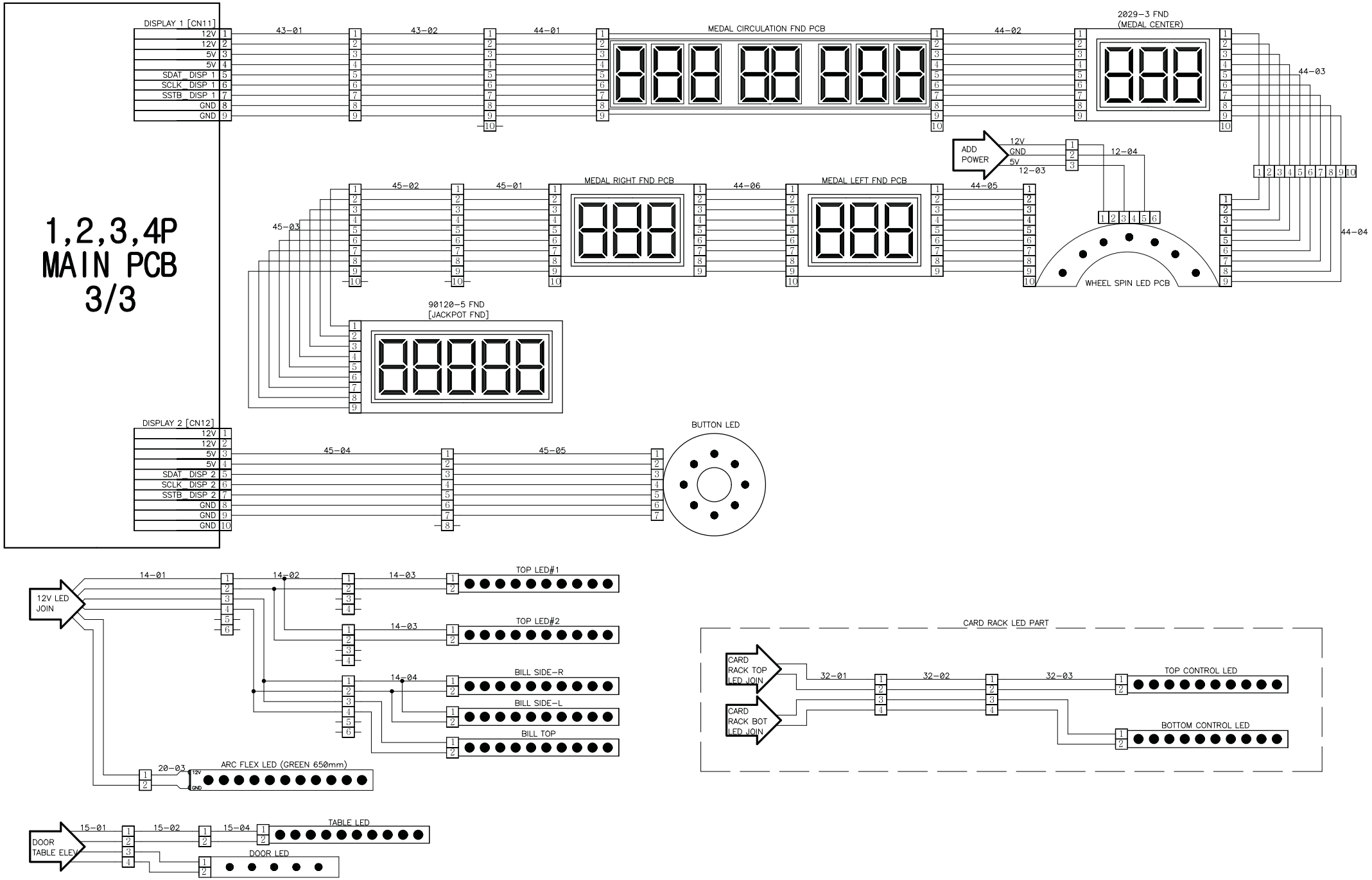


| DRAWN BY | DATE | 2017.01.25 |
|---|---|---|
| K.H.LIM | ITEM | DC SUPER HEROES |
| ANDAMIRO | PAGE | 4 PAGE |

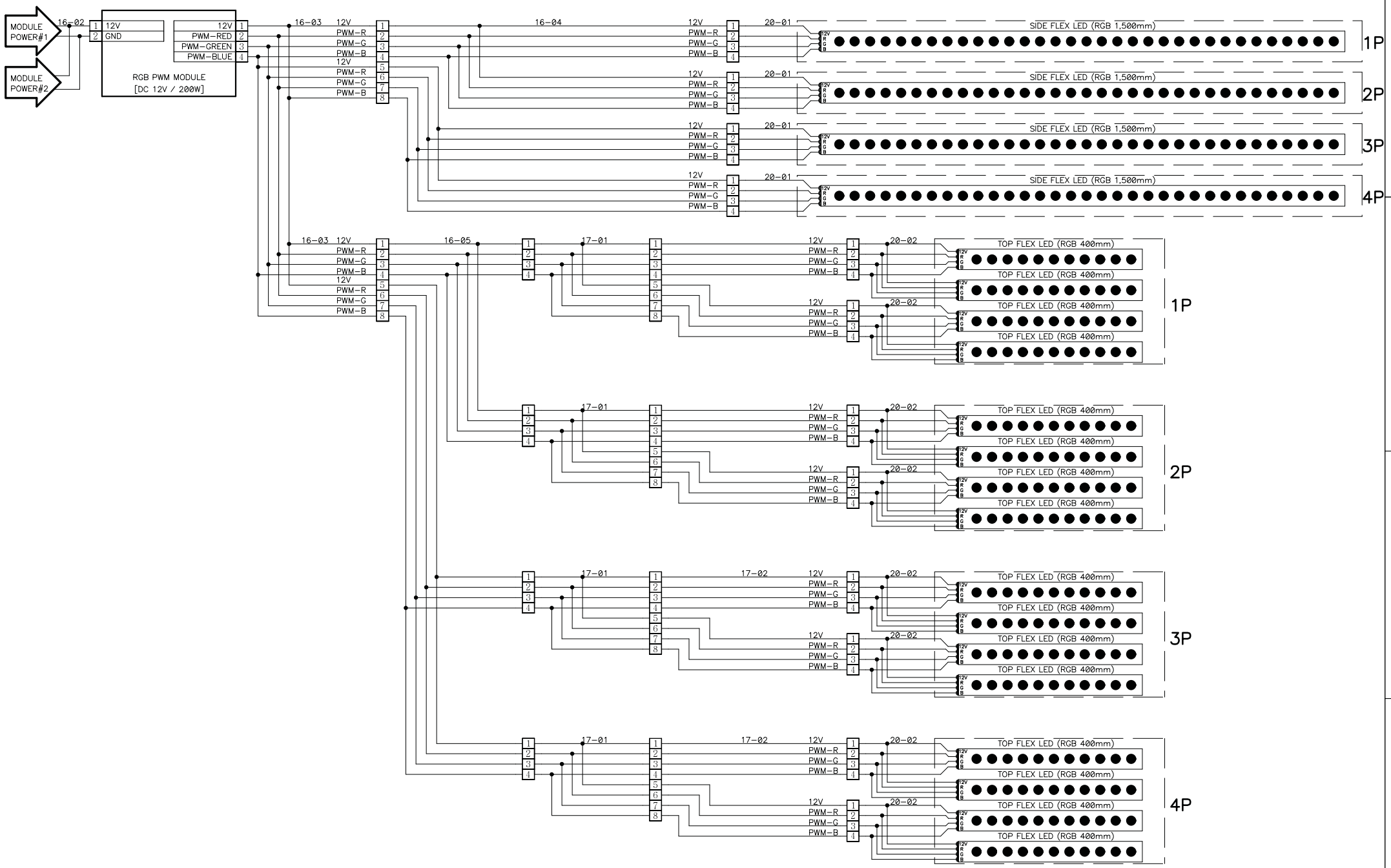


| DRAWN BY | DATE | 2017.01.25 |
|---|---|---|
| K.H.LIM | ITEM | DC SUPER HEROES |
| ANDAMIRO | PAGE | 5 PAGE |

# ANDAMIRO WARRANTY POLICY

Andamiro warrants to the original purchaser that all of its products will be free from defects in material and workmanship.

**Andamiro warrants the parts from date of shipmet as follows.**

**- One Year Limited Warranty : Electronic Boards & Monitor**
**- 6 Month Limited Waranty : Moving Parts**

For any key components within the warranty period, Andamiro will repair or replace defective components free of charge.

When placing a warranty request, the customer is requested to furnish the following information:

1. Name of the game.
2. Serial Number of the game.
3. A Detailed Description of the defect/s experienced.

This warranty does not apply to the defects caused due to misuse or abuse of the product.

Any alterations made to game or game parts will void this warranty.

For warranty details on our product range please visit our website, www.andamiro.com.

ANDAMIRO CO., LTD.
www.andamiro.com

Please complete the following request form to place a warranty request and send it to ANDAMIRO Korea either by fax (Fax No: +82-31-908-7548) or by e-mail. The e-mail address of the person in charge of each region is shown in our web-site, www.andamiro.com

For the on-line request, please visit our web-site, www.andamiro.com and click "Customer Service" and then click "Contact Us" in which you shall find the e-mail address of the person in charge of each region.

**1. Company Name :** _____

**2. Mailing Address :** _____

_____

**3. E-Mail Address :** _____

**4. Phone No :** _____

**5. Name of the person in charge :** _____

**6. Description of the product defects**

6-1 ) Name of the Game : _____

6-2 ) Serial No : _____

6-3 ) Date of Purchase : _____

6-4 ) Detailed description of the product defects.

_____

_____

_____

Remarks: If possible, please provide us with related photos and videos which will be greatly appreciated to verify the cause of the problem.

ANDAMIRO CO., LTD.
TEL : 82-31-909-2123~4,2051

[ADDRESS OFFICE] 6006 M-City Tower, 195, Baengmaro, Ilsandong-gu, Goyang-si, Gyonggi-do, 410-834 Korea
[FACTORY] 72 Nochemgil, Ilsan-donggu Goyang-si, Gyonggi-do, 410-834 korea

USA BRANCH
ANDAMIRO USA CORP.
17230 S. Main Street
TEL : 1-310-767-5800

[ADDRESS] Gardena, California 90248 U.S.A.

Homepage http://www.andamiro.com/

ANDAMIRO®